SILICON CHIP

DECEMBER 2018
ISSN 1030-2662
12
9 771030 266001
PP255003/01272

The VERY BEST DIY Projects!

$9.95* INC GST NZ $12.90 INC GST

UNBELIEVABLY SENSITIVE MAGNETOMETER

Amazing Display with our Christmas Tree Light Controller

The Grand Tour: VOYAGERS 41-YEAR ODYSSEY

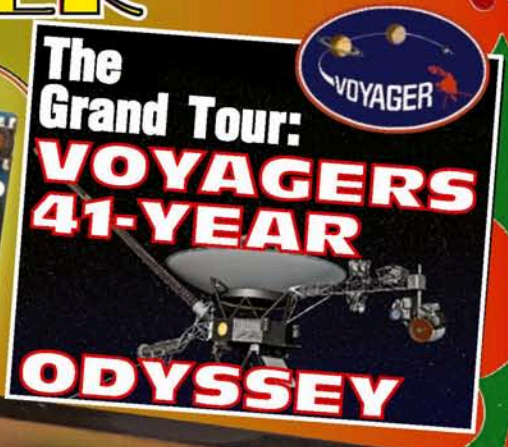

Build this one for the grandkids... for Christmases to come!

Useless Box

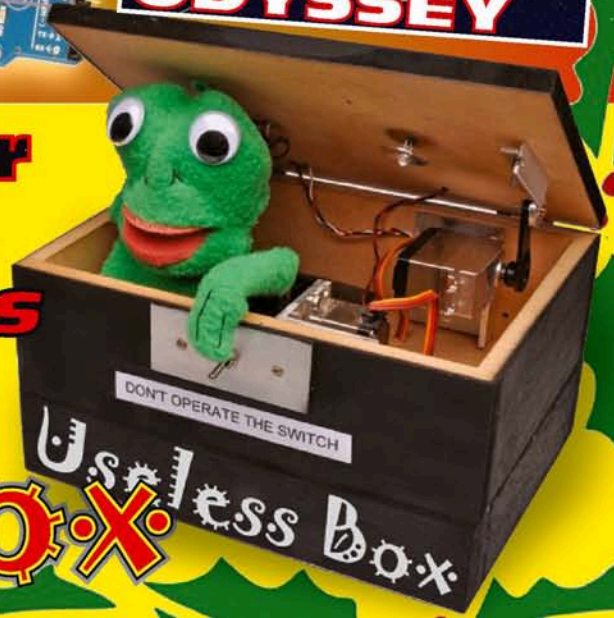

Jaycar Electronics

duinotech

Project of the Month:

Our very own specialists are developing fun and challenging Arduino®-compatible projects for you to build every month, with special prices exclusive to Nerd Perks Club Members. Sure, you can buy off the shelves but where's the FUN in that!

STEP-BY-STEP INSTRUCTIONS AT:
jaycar.com.au/diy-christmas-star

SEE OTHER PROJECTS AT:
www.jaycar.com.au/arduino

MAKE YOUR OWN Christmas Star WITH ARDUINO®

With Christmas just around the corner, now is the right time to build your own Christmas Star.

Help the three wise men find their way with this clever Christmas Star built around 8 x 8 dot matrix display connected to an Arduino Nano.

Finished project.

WHAT YOU NEED:

DUINOTECH NANO BOARD ARDUINO COMPATIBLE	XC4414	**$29.95**
USB TO MINI USB CABLE	WC7710	**$9.95**
8 X 8 LED DOT MATRIX MODULE	XC4499	**$7.95**
SOCKET TO SOCKET JUMPER LEADS	WC6026	**$5.95**

VALUED AT $53.80

NERD PERKS CLUB OFFER
BUNDLE DEAL $39.95
SAVE OVER 25%

Don't Forget Your Essentials!

$14.95

JUMPER LEAD MIXED PACK WC6027
A mixed pack for your Arduino®, breadboarding and prototyping projects.
- 150mm long
- 100 pieces

$29.95

LED PACK 100-PIECES ZD1694
Contains 3mm and 5mm LEDs of mixed colours. Even includes 10 x 5mm mounting hardware FREE!
- Red, green, yellow, orange LEDs

See website for full contents.

$34.95 ea

FLEXIBLE LIGHT DUTY HOOK-UP WIRE - PK 8 WH3009
Quality 13 x 0.12mm tinned hook-up wire on plastic spools. 8 rolls of different colour included. 25m on each roll.

Not sure what they'll love?
Grab a Jaycar Gift Card!

NERD PERKS CLUB MEMBERS RECEIVE:

20% OFF COMPUTER ADAPTORS*

**Applies to Jaycar 701B Computer Adaptors: Including D9, D15, D25 Gender Changes, USB A & B, Firewire, DVI adaptors.*

EARN A POINT FOR EVERY DOLLAR SPENT AT ANY JAYCAR COMPANY STORE* & BE REWARDED WITH A $25 JAYCOINS GIFT CARD ONCE YOU REACH 500 POINTS!
**Conditions apply. See website for T&Cs*

REGISTER ONLINE TODAY BY VISITING:
www.jaycar.com.au/nerdperks

Catalogue Sale 24 November - 26 December, 2018

To order: **phone 1800 022 888 or visit www.jaycar.com.au**

Contents

Vol.31, No.12; December 2018

SILICON CHIP

www.siliconchip.com.au

Features & Reviews

12 "The Grand Tour": the incredible Voyager missions

Way back in 1977, two Voyager spacecraft were launched to probe Saturn, Uranus, and Neptune. 41 years later – and way past their expected demise – they're now the most distant man-made objects in space – by Dr David Maddison

44 The Arduino Uno's cousins: the Nano and Mega

Arguably the world's most popular micro (especially amongst hobbyists), the Arduino has two not-so-well-known variants, the smaller Nano and the larger Mega 2560. Here's an explanation of the differences – by Jim Rowe

74 El cheapo modules, part 21: stamp-sized audio player

Less than five dollars gets you the DFPlayer mini: a tiny (21 x 21 x 12mm) digital audio player which can handle MP3, WMA and WAV, in mono or stereo, off either a microSD card or USB flash drive with a capacity up to 32GB – by Jim Rowe

Constructional Projects

24 An *incredibly* sensitive Magnetometer to build

A magnetometer detects changes in magnetic fields, whether natural or man-made. This magnetometer is SO sensitive you have to make allowances for such things as waves and tidal flow! – by Rev Thomas Scarborough

38 Amazing light display from our LED Christmas tree . . .

Last month we brought you our EXPANDABLE Christmas Tree, which is already very popular with readers (judging by the number of kits sold!). Now we present a controller to provide spectacular display options – by Tim Blythman

66 A Useless Box

What does a Useless Box do? Well, not much – it's pretty useless! But build this nonsense project and you'll keep the kids (and grandkids) amused until at least next Christmas – and probably way beyond – by Les Kerr & Ross Tester

84 Low voltage DC Motor and Pump Controller (Part 2)

With a huge array of options to suit YOUR particular application, this motor/pump controller will handle up to 40A DC on a nominal 12V supply. We couldn't fit it in last month – so we've used the time to include even more! – by Nicholas Vinen

Your Favourite Columns

58 Serviceman's Log

Travelling makes me go cuckoo! – by Dave Thompson

78 Circuit Notebook

(1) Simple guitar practice amp
(2) Accurately measuring voltage and current at the same time
(3) 1kHz crystal-locked sinewave oscillator

94 Vintage Radio

1948 AWA compact portable Model 450P – by Graham Parslow

Everything Else!

2 Editorial Viewpoint
4 Mailbag – Your Feedback
64 Christmas Showcase
82 SILICON CHIP Online Shop
99 Ask SILICON CHIP
103 Market Centre
104 Advertising Index
104 Notes and Errata

No-one would have believed that the two Voyager spacecraft would still be operational 41 years later. But they are, albeit running on limited power – Page 12

You won't believe how sensitive this new Magnetometer is. We found it could detect a pin head centimetres deep! – Page 24

Want to be able to individually address each LED in our expanding Christmas Tree? We show you how to do it with this new controller – Page 38

They can't resist flicking the switch. But when they do, Froggy comes out and turns the switch back off again! Build it for Christmas! – Page 66

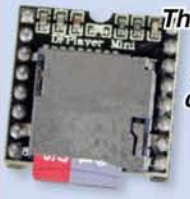

This month's El Cheapo module is intriguing: a digital audio player, complete with its own amplifier and card reader, for less than $5 out of China! – Page 74

Find us on Facebook

www.facebook.com/siliconchipmagazine

SILICON CHIP
www.siliconchip.com.au

Editor Emeritus
Leo Simpson, B.Bus., FAICD

Publisher/Editor
Nicholas Vinen

Technical Editor
John Clarke, B.E.(Elec.)

Technical Staff
Jim Rowe, B.A., B.Sc
Bao Smith, B.Sc
Tim Blythman, B.E., B.Sc

Technical Contributor
Duraid Madina, B.Sc, M.Sc, PhD

Art Director & Production Manager
Ross Tester

Reader Services
Ann Morris

Advertising Enquiries
Glyn Smith
Phone (02) 9939 3295
Mobile 0431 792 293
glyn@siliconchip.com.au

Regular Contributors
Dave Thompson
David Maddison B.App.Sc. (Hons 1), PhD, Grad.Dip.Entr.Innov.
Geoff Graham
Associate Professor Graham Parslow
Ian Batty M.Ed.

Cartoonist
Brendan Akhurst

SILICON CHIP is published 12 times a year by Silicon Chip Publications Pty Ltd. ACN 626 922 870. ABN 20 880 526 923. All material is copyright ©. No part of this publication may be reproduced without the written consent of the publisher.

Subscription rates: $105.00 per year, post paid, in Australia.
For overseas rates, see our website or email silicon@siliconchip.com.au

Editorial office:
Unit 1 (up ramp), 234 Harbord Rd, Brookvale, NSW 2100.
Postal address: PO Box 139, Collaroy Beach, NSW 2097.
Phone (02) 9939 3295.
E-mail: silicon@siliconchip.com.au

ISSN 1030-2662
* Recommended & maximum price only.

Printing and Distribution:
bluestar
Derby Street, Silverwater, NSW 2148.

Editorial Viewpoint

Love or hate Google, the massive EU fine is a joke

While the €4.34 billion fine that an EU court imposed on Google this July (which they are in the process of appealing) may be legally sound, it is based on a lack of technical understanding. The judgment is likely to decrease competition in the smartphone space, the very opposite of what the court is trying to achieve.

This case has echoes of United States v. Microsoft Corp from back in 1998-2001 (ah, nostalgia!). The argument then was that Microsoft's integration of Internet Explorer (IE) into Windows had an anti-competitive effect on companies that offered other web browsers. Microsoft lost that case (wrongly, in my opinion, despite the rage I feel when I see IE) but ended up with a slap on the wrist.

In the more recent Google case, the argument is as follows: Google allows smartphone makers to use their Android phone operating system for free as long as they follow certain rules. One of them is that Google Search and the Chrome browser must be included on the phone or else the Google Play Services (used by many Google apps) is not made available.

They also made payments to some manufacturers and networks to make the Google search engine the default on their phones. And they threatened to withhold some Google apps from manufacturers who sold devices running "forked" versions of Android – ie, not the versions distributed by Google.

According to the EU court, part of the reason that this is so bad is that the Google Play Services is a "must-have" and the threat to withhold is a serious one. But I wonder if these people have ever travelled to China.

All Google services are blocked in mainland China. As a result, Android phones sold in China don't include any apps which rely on them, or the Google search features. And yet Android phones are incredibly popular in China, with over half a billion sold last year.

And having these Google apps on your phone hardly locks you into using them. It's dead easy to install a different browser or select a different default search engine. You can disable the Play Store on day one and simply download and install app packages manually from web pages, if you want. There's absolutely nothing stopping you.

Part of the complaint was that 95% of Android users use Google search, which the EU court thinks indicates that they are somehow locked in. Maybe most users prefer to use Google search because it's the best option available – did they consider that? When I was in China and couldn't access Google search, I tried several alternatives and found them very poor by comparison.

I'm of two minds about Google as a company. Many of their products are amazing but their corporate culture appears to be quite toxic and they seem to allow politics to invade their decision making in troubling ways. But I still don't see how this fine can be justified. The logic of the court simply doesn't hold up to scrutiny. It makes the whole thing look like a shakedown.

It is quite reasonable that they expect vendors to bundle some of their apps on phones if they are going to have free use of their operating system. The alternative would be to charge manufacturers to use Android, which I expect would increase the cost of phones. That's hardly helping consumers and it is likely to have an impact outside of the EU too.

While I can certainly see how some of the restrictions that Google have placed on the use of Android could be seen as mildly anti-competitive, they also have the beneficial effect of providing standardisation across multiple generations of smartphones, avoiding a fragmented nightmare of different, incompatible versions of the operating system and software.

So on balance, I think Google should be rewarded for providing Apple some competition and giving consumers more options, not punished.

Nicholas Vinen

Your Single Authorized Source

750+ Quality Name-Brand Manufacturers In Stock for Immediate Shipment

AUSTRALIA
DIGIKEY.COM.AU
1800 285 719

NEW ZEALAND
DIGIKEY.CO.NZ
800 449 837

Digi-Key® ELECTRONICS

*__Australia:__ A shipping charge of $24.00 AUD will be billed on all orders of less than $60.00 AUD. A shipping charge of $20.00 USD will be billed on all orders of less than $50.00 USD. All orders are shipped via UPS, Federal Express, or DHL for delivery within 3-4 days (dependent on final destination). No handling fees. All prices are in Australian dollar or United States dollar. __New Zealand:__ A shipping charge of $26.00 (NZD) will be billed on all orders of less than $66.00 (NZD). A shipping charge of $20.00 USD will be billed on all orders of less than $50.00 USD. All orders are shipped via UPS for delivery within 3-4 days (dependent on final destination). All prices are in New Zealand dollar or United States dollar. Digi-Key is an authorized distributor for all supplier partners. New product added daily. Digi-Key and Digi-Key Electronics are registered trademarks of Digi-Key Electronics in the U.S. and other countries. © 2018 Digi-Key Electronics, 701 Brooks Ave. South, Thief River Falls, MN 56701, USA

ecia MEMBER

Letters and emails should contain complete name, address and daytime phone number. Letters to the Editor are submitted on the condition that Silicon Chip Publications Pty Ltd may edit and has the right to reproduce in electronic form and communicate these letters. This also applies to submissions to "Ask SILICON CHIP", "Circuit Notebook" and "Serviceman".

The government's My Health Record system is not what you think

Nicholas Vinen's editorial on the Government's My Health Record initiative is interesting for several reasons. I assume that Nicholas is relying on the information provided by the Australian Digital Health Agency regarding the opt-out period during which people can elect not to be registered for a My Health Record.

The headline story put out by the government is that "My Health Record is an online summary of your key health information. When you have a My Health Record, your health information can be viewed securely online, from anywhere, at any time – even if you move or travel interstate."

This gives the impression, repeated by Nicholas, that My Health Record is an electronic medical record and everyone who does not opt-out will get one. The realities, as detailed in the depths of the myhealthrecord.gov.au website and in the many submissions to the Senate Inquiry, are very different.

At the end of the opt-out process, people will only be registered for a My Health Record; they will not get an online summary of their health information – patients and GPs will need to provide and upload this data and then ensure it is always accurate and current.

My Health Record is not a medical record system; it is a hybrid, summary system that tries to meet the needs of both health providers and consumers but fails to satisfy either. Claims as to the benefits of medical record systems do not apply to My Health Record – they are very different beasts.

There is not enough room in this letter in which to fully cover the many concerns that have been expressed about the lack of justified benefits. That includes the costs to health practitioners of maintaining two record systems (their own and the government's), the risks of inappropriate access (both by authorised and unauthorised users, including by the government itself) and the potential dangers to minority groups.

Readers who wish to inform themselves of the many different opinions surrounding My Health Record should consult the more than 100 submissions to the Senate Inquiry, at siliconchip.com.au/link/aaly

You can also review the evidence provided at the public hearings at siliconchip.com.au/link/aalz and the final report of the inquiry at siliconchip.com.au/link/aam0

The Australian Privacy Foundation has almost 200 links to articles and press coverage of the debate during the opt-out period at https://privacy.org.au/campaigns/myhr/

Bernard Robertson-Dunn, BEng, MEng, PhD, MIEAust, MIEEE, MIET
Australian Privacy Foundation
Chair, Health Committee

Agreement with concern over online private data collection

Regarding Nicholas Vinen's well-written observations about the collection of personal information by search engines, social media and online services in the October 2016 issue. I was once told that if you're not paying for a product or service, chances are you're the product.

This is certainly true of all the email & messaging, photo sharing, time management, file storage and basically any free content sharing services available on the internet – we can access more high-quality free services than ever, in return for just about any information that the provider wants to glean from us with that service. That information becomes their property to be sold!

More often than not, that information is used (legally) to target online advertising specifically to you, the user, and your specific data is of little interest to the party collecting it. Whether that's desirable to you is an individual decision; the lines between legality and morality in this area move more quickly than most of us can keep up with.

One must also consider the increasing risk of private data being stolen and used without permission for nefarious purposes by unknown third parties, as the potential of that information in less law-abiding hands is limitless.

Callum Martin,
via email.

More doubt over eHealth records

Leo has taught you well, Nicholas. My opinion is you are a very naive young man, sadly.

Please publish a story on the technology being employed to host eHealth in Australia, what safeguards are actually in place and what would be the ideal scenario needed to make this monster safe.

How far from the essential security technologies are we with this project? I think we cannot trust the Minister on this or anything else. I would like to see some facts to back up your opinion.

Chaim Lee,
Newtown, Qld.

Giandel inverters suitable for UPS project are now in stock

Amongst many projects that I have built over the years from SILICON CHIP articles, when the UPS project was introduced (May-July 2018; siliconchip.com.au/Series/323), I just had to build it. So I sourced all the parts required except for the specified inverter.

I ordered and paid for an inverter from the distributors, Giandel, and received an email back confirming my order, including a tracking number from Australia Post. Two days later, I received a further email informing me that the inverter that I had ordered was no longer in stock.

R&S®Spectrum Rider FPH

Small form factor to handle big tasks

Frequency extension up to 31 GHz performed via keycode

The new handheld spectrum analyzer from Rohde&Schwarz:

- Capacitive touchscreen like a smartphone
- Longest battery life (8 h) meets lightest weight (2.5 kg)
- Measurements with confidence in the lab and in the field

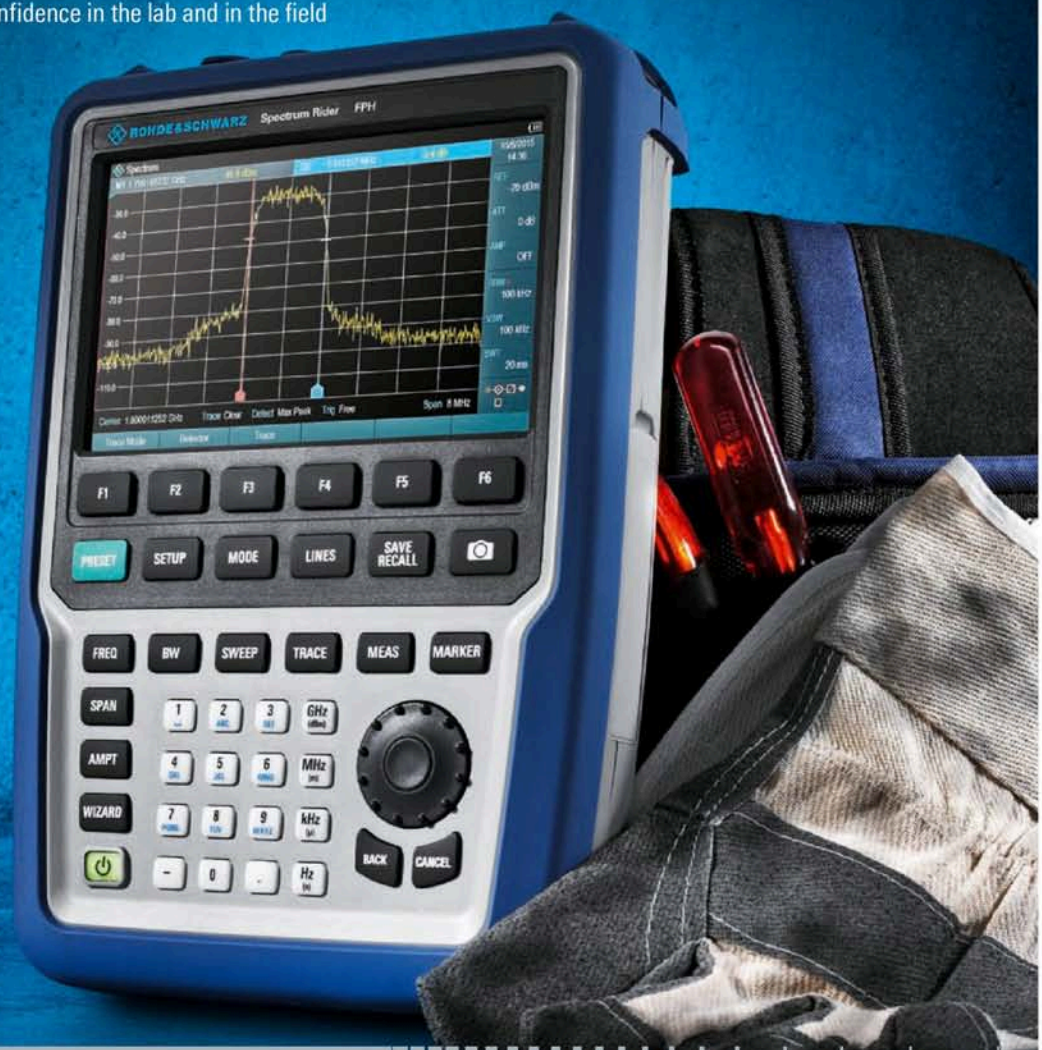

Want to know more?
Visit: www.rohde-schwarz.com/ad/spectrum-rider

sales.australia@rohde-schwarz.com

ROHDE&SCHWARZ

To keep a long story short, SILICON CHIP kindly published a list of alternative inverters in the July 2018 issue, but they were generally more expensive than the originally specified one or did not have the remote control that was an integral feature of the UPS design. Further, I was not prepared to pay $899 when they started appearing on eBay.

After checking the Giandel website every week or so for the last several months, they now have an updated version of that inverter for sale. It is slightly wider but otherwise seems identical. And the good news is that they will send it post-free for $180. Perhaps others who may have been in my situation will find this information useful.

Ian Hawke,
Glossodia, NSW.

Sourcing obsolete 2SA970 low-noise transistors

I am writing in regards to the letter published in the Ask SILICON CHIP section of the November 2018 issue, titled "Amplifier troubleshooting and sourcing low-noise transistors".

Having recently completed the excellent 20W Class-A amplifier that uses these transistors, I can confirm that these transistors are still available from www.futurlec.com for the princely sum of US$0.10 each.

I knew at the time that they were no longer available in Australia so I bought 20 of them for future use just in case and would suggest that others who are building amplifiers which specify these transistors do the same.

My experience of Futurlec is their delivery is quite slow but they stock many items that are hard to get elsewhere at very reasonable prices.

Another option is eBay. Some local sellers can supply these transistors (in Melbourne). The prices are higher but if time is of the essence, this may be the best option. See: siliconchip.com.au/link/aam1

Peter Clarke
Adelaide, SA.

Some ESP-01 modules have assembly faults

I want to provide some feedback on the ESP-01 WiFi module I purchased from your online shop (Cat SC3982). Two of them did not work correctly. On close examination, I noticed that on both these boards the capacitor/resistor next to the crystal and closest to the ESP8266 IC was not in the correct location but was soldered to the end of the crystal.

Fortunately, I can work with SMD components (though these tiny ones are a struggle!) and I removed and replaced it in the correct location. The modules then worked.

I also noticed that the SPI flash supplied on these boards is the "8Mb" PUYA Semiconductor P25Q80H that has a dodgy reputation for reliability (particularly the number of times they can be flashed). Also, the flash tool reports them as 4Mb when the datasheet says 8Mb.

I replaced the SPI flash chip on all eleven boards I purchased with the Winbond W25Q32JVSSIQ 32Mb SPI flash (about $1.25 each from Digikey). Not only should this yield an improvement in reliability but it also gives me a lot more room if I decide to put my own customised code on the units, and I can run the SPI bus at 80MHz.

I have upgraded all the boards to the v1.6.2 AT firmware and they are all working well.

Gerard Sexton,
Park Orchards, Vic.

Response: we examined the other modules we have in stock and couldn't see any with the same fault. We will look out for this fault in future. Your comments about the flash chips are interesting. It doesn't surprise us that these modules would use the cheapest possible flash chips, given their low price.

Using Steam Whistle project to make surf sounds

The white noise generator and voltage-controlled gain feature of the TDA7052A in the Steam Whistle/Diesel Horn project in the September issue (siliconchip.com.au/Article/11226) could potentially be used to make a Surf Sound Generator.

This could be done by implementing three digital swell envelopes in the PIC firmware, averaging them and adding a constant minimum noise level. The resulting value would then define the PWM output which controls the output volume.

The phase and duration randomisation could perhaps be implemented by extracting data from the white noise generator. The swell envelopes could either be generated algorithmically or could be implemented using a look-up table.

Fast Debugging at an Affordable Price

MPLAB® Snap Offers Uncompromised Speed at an Amazing Low Price

The MPLAB Snap In-Circuit Debugger/Programmer allows affordable, fast and easy debugging and programming of most PIC® and AVR® Flash microcontrollers and dsPIC® digital signal controllers, using the powerful graphical user interface of MPLAB X Integrated Development Environment (IDE).

The MPLAB Snap Debugger/Programmer can be connected to your computer using a Hi-Speed USB 2.0 interface and can be connected to the target via an 8-pin Single In-Line (SIL) connector. The connector uses two device I/O pins and the reset line to implement in-circuit debugging and In-Circuit Serial Programming™ (ICSP™). It has all the speed and features entry-level users need to quickly debug their prototype.

Available now for just **US$14.95**!

Contact Information
Microchip Technology Australia
Email: aust_nz.inquiry@microchip.com
Phone: +61 (2) 9868-6733

www.microchip.com/MPLABsnap

MICROCHIP

The Microchip name and logo, the Microchip logo, AVR, dsPIC, MPLAB and PIC are registered trademarks and ICSP and In-Circuit Serial Programming are trademarks of Microchip Technology Incorporated in the U.S.A. and other countries. All other trademarks are the property of their registered owners. © 2018 Microchip Technology Inc. All rights reserved.

Since only the noise and PWM amplitude outputs are required, front panel potentiometer controls for Volume, Surf Speed and Noise Floor could be provided.

I had been toying with the idea of designing such a circuit using an ATtiny25 (it's ten times faster than the PIC12F617) but I have not had time to do so yet. Perhaps you would consider designing such a project.

Erik Christiansen,
via email.

John Clarke responds: thanks for that suggestion. I had considered using the voltage-controlled amplifier to make a surf sound generator. We just recently published the Tinnitus/Insomnia Killer, based on the same white noise generator chip. I will consider designing a surf sound simulator based on the same IC in the near future.

405-line TV system was high definition for its day

The November article on the restoration of the 1939 UK TV set was a most enjoyable surprise. I'd love to have been involved in the project. I would like to read more similar stories, please.

That set's 405-line system, used from 1936, could still be seen in Australian TV's early (pre-videotape) years in the form of 16mm film telerecordings of BBC programs sold here.

As the ABC's representative attached to the old Film Censorship Board (which then had to classify all imported programs), I saw these not on a regular TV screen, but as projected prints, and even at such enlargement the picture quality was remarkably good (despite losses in the recording process itself – simply filming a TV screen!).

You became aware of the coarse line structure only with a staircase effect on slightly off-horizontal objects, and anyone in a striped suit made merry moiré patterns, but the vision was generally better than the equivalent American 525-1ine NTSC kinescopes.

I think the BBC used something called spot wobble, giving slight vertical oscillation to the beam and so thickening the lines, and there may have been other improvements since their TV began in 1936.

So by the standards of those pioneering times, the claim for "high definition" was not exaggerated; even 20-plus years later the picture was still acceptable – and was watched by Australian TV audiences.

On a Beta (yes!) tape, I have a documentary called "TV Is King" which, while not going much into technicalities, gives a fascinating look at pre-war UK and German TV. For any of your readers interested, I might be persuaded to light the boiler under the faithful old Sony and copy it.

Brian Wallace,
Dora Creek, NSW.

Vintage TV restoration is surprisingly popular

It was fascinating to read Dr Hugo Holden's account of the Prewar HMV TV in the November issue (siliconchip.com.au/Article/11314).

Whilst I've realised that restoring a vintage radio is within the capabilities of an experienced technician, even without much specific knowledge, I never expected that it would be possible to fix up an old TV set like that, except for those who used to do that for a living. Even then, I thought there would have to be a limit to picture tube life.

It's time to TRI us!

Why TRI Components ?

For nearly 50 years TRI Components has been operating from our base here in Melbourne and we are proudly 100% Australian owned and operated.

We only supply the best electronic components for Australia and New Zealand customers from the best suppliers.

Our depth of experience and expertise in the RF, POWER and EMI fields ensure that we can help to solve any requirement and provide the very best solutions quickly.

Our team are dedicated to providing good old-fashioned service with a smile that ensures that all of our customers repeatedly and confidently return time and again to us.

Coilcraft
TRI COMPONENTS – Authorised COILCRAFT Australian Distributor

Our Points of Difference

FREE SAMPLES: *We are a supplier that keeps FREE samples on site in our Melbourne warehouse for immediate issue. Other suppliers in Australia/NZ do not offer free samples at all, let alone so quickly.*

PRICE: *We beat online pricing and account holders will be invoiced and therefore no need to pay upfront when ordering. COD also available on request. Purchasing through the official Australian representative eliminates the additional costs of duties and expensive overseas freights.*

LOCAL SUPPORT: *Our Engineers have over 50+ years of experience, offering supportive expert advice. We have knowledgeable and friendly staff within all aspects of the business, that provide fast and reliable support.*

TRI COMPONENTS

1/32 Miles Street, Mulgrave Vic 3170
(+61 3) 9560 2112 (+61 3) 9560 6354
www.tricomponents.com.au tricom@tricomponents.com.au

How wrong I was! I now belong to a few vintage radio and TV groups on Facebook. Most members are US-based and I'm continually astounded at both the success rate for people who clearly have no real understanding of TV (or electronics) technology and the absurdly low prices Americans pay for "vintage" TVs.

Quite often people post how they'd just bought old round-tube 1940s sets with working tubes, often for under $US100! Unfortunately, getting one shipped out here is frighteningly expensive.

What is even more incredible is the number of people who are even getting old 1950s round tube colour sets working, often with the original picture tubes.

There are even working examples of the very early RCA sets where the colour dots were printed onto a flat glass sheet that was surrounded by a monochrome type glass envelope. Who would have imagined those tubes lasting for more than 60 years?

It does take me back. My first job was in a TV repair shop in Brisbane in the early 1970s, and one of my tasks was the "$60 Overhauls".

At that time a lot of the old original '50s TVs were showing their age, but with colour broadcasts just a few years away, people were understandably reluctant to invest in new Black and White sets.

The answer was the aforesaid overhauls, where a reconditioned picture tube would be fitted, any suspect parts were replaced, the tuner was overhauled and the set generally returned to some semblance of its original condition.

I didn't know too much about old TVs at the time, except what I'd read in Serviceman columns in *Electronics Australia*.

The message there was pretty clear: "Paper capacitors - chuck 'em!" So for each common model, I got out a sheet of cardboard and made up a list of all the paper capacitors they used, and just did a bulk "re-cap".

This approach did not sit well with some of the older staff, who seemed to have an almost Calvinistic distaste for such labour-saving shortcuts, but then the "Big Boss" saw what I was doing and pronounced it a splendid idea, and that was that!

Now, a half-century later, that is exactly the approach being used by amateur TV restorers, with remarkably high success rates.

What has further astounded me is that there are quite a few group members here in Australia, and many of the "old bangers" I worked on nearly 50 years ago are still going, many with the original tubes! Never in my wildest nightmares would I have expected to see an HMV M1 still functional....

The Facebook groups can be quite entertaining, particularly the endless conflicts between the old veterans like me who are at pains to point out that TV servicing isn't quite as hard as many people think, and the wannabe guys, clueless "net-sperts" whose primary mission in life seems to be to prove the exact opposite...

Keith Walters,
Riverstone, NSW.

Battery valves were not used in car radios

I really enjoy Ian Batty's articles on Vintage radio and the one in the October 2018 issue on the Emerson 838 Hybrid portable was extremely interesting.

The Editor's note on page 102 did rather surprise me, however, as battery valves were not used in hybrid car radios for a variety of reasons, such as filament fragility with vibration and wide variation of filament voltage which would have reduced the reliability of the sets.

Car radios were manufactured as hybrids with valves and transistors as you stated. The valves used in all the hybrid car radios I serviced used indirectly heated valves with heaters usually requiring 12V.

These valves were designed to operate nominally from 12V and as I remember from viewing some of the data sheets, they were rated up to around 33V on the plate.

My Vintage Radio article in the December 2006 issue was on a typical hybrid radio, an AWA 976A. Other manufacturers such Astor also made hybrids.

Rodney Champness,
Mooroopna, Vic.

Using strain gauges to demonstrate bridge loading

I read with interest the item in the Mailbag section of the October 2017 issue (pages 10 & 11) relating to strain gauge beams. It reminded me of some problems I had to solve back in the 80s, as a technical officer at a tertiary teaching organisation.

An experimental set-up had been designed for the students, so that they could observe the effect of a load travelling across a bridge. A weighted vehicle would roll along the top of a U-channel, with two strain gauges mounted in the middle of the bridge, one on the top side of the bottom of the channel and the other on the underside.

freetronics www.freetronics.com.au

Love electronics? We sure do!
Share the joy:
give someone an
Experimenters Kit
for Arduino:

Includes:
- 48-page printed project guide
- Arduino compatible board / USB cable
- Solderless breadboard
- Sound & Piezo module
- Light sensor module
- Micro servo motor
- Red, green, and RGB LEDs
- Resistors, transistors, and diodes
- Buttons and potentiometer
- ... and more!

Use discount code
"SCDEC18"
for 20% off
until Feb 2019!

Support the Aussie electronics industry.
Buy local at www.freetronics.com.au

Many more boards available for Arduino, Raspberry Pi, and ESP8266 projects: motor controllers, displays, sensors, Experimenters Kits, addressable LEDs, addressable FETs

Arduino based USB Full Colour Cube Kit - visualise, customise and enjoy on your desk!

Australian designed, supported and sold

OCEAN CONTROLS
Helping to put you in Control

LogBox Connect WiFi
LogBox Wi-Fi is an IoT device with integrated data logger and Wi-Fi connectivity. It has three universal analog inputs one digital input and an alarm output.
SKU: NOD-012
Price: $499.95 ea + GST

LogBox Connect 3G with GPS
The LogBox 3G is an IoT device with integrated data logger and GPS and 3G / 2G connectivity.
SKU: NOD-0111
Price: $899.95 ea + GST

N1500 Process Indicator
Five digit universal process indicator accepts thermocouples, Pt100, 4 to 20 mA, 50 mV and 10 V signals. Analog retransmission and 2 Alarm Relays. 24 VDC Powered.
SKU: IPI-104
Price: $269.00 ea + GST

Analog Isolated Transmitter
Ultra Slim Analog Isolated Transmitter 0 to 5A DC In, selectable current or voltage output. DIP switch allows selection of different outputs 0-5V,0-10V, 0-20mA or 4-20mA.
SKU: AXB-125
Price: $189.00 ea + GST

Split core current transducer
Split core hall effect current transducer presents a 4 to 20 mA DC signal representing the DC current flowing through a primary conductor. 0 to 200 A primary DC current range.
SKU: WES-063
Price: $119.95 ea + GST

Pump Seal Leak Relay
pump seal leak monitor relay/water leak detection relay & thermistor monitoring relay features detection of water contamination of oil, detection of water leaks from pipes in buildings, isolated probe supply and LED indication, Klixon version.
SKU: NTR-211
Price: $199.00 ea + GST

Remote relay control across a LAN
Each TCW122B-RR is an Ethernet based I/O module that has two digital inputs and two relay outputs. Two units can be paired in order to seamlessly send digital IO data to the other paired device.
SKU: TCC-003
Price: $119.50 ea + GST

For Wholesale prices
Contact Ocean Controls
Ph: (03) 9708 2390
oceancontrols.com.au
Prices are subjected to change without notice.

The beam was about 2m to 3m in length and was only supported at each end, to allow for some bending and change in length.

The two strain gauges were wired to an amplifier and the output went to an X-Y plotter. The academic in charge kept calling for more amplification and added weight to the vehicle, as the output to the plotter was low; but both the conditioning amplifier and recorder were at maximum sensitivity. I was brought in to try to fix this problem.

The beam was visibly deflecting with the vehicle at mid-span. The principal output was two peaks that coincided with the vehicle's axles passing the strain gauges. Torsional stability of the beam was poor.

Fortunately, the vehicle was designed not to become derailed, although it wobbled most alarmingly. I was surprised that the gauges remained adhered to the steel!

Then, one night, the answer woke me up – with that blinding flash of inspiration. The initial designer/installer of the gauges had failed to consider where the neutral axis of the section actually was.

The gauges were wired as if one was in tension and the other in compression. The one on the underside was in (considerable) tension but the one on top was NOT in compression; it was in much the same value of tension. So the output from one gauge virtually negated the other.

What was being observed was the cross section flexing as the trolley moved over the gauges. The transverse sections of the gauge foil were detecting the transverse localised bending and stretching of the section and the effect was being observed as two peaks.

My solution was to add two more gauges to form a full bridge. Then I just had to reduce the weight of the vehicle and lower the amplification of both the conditioning amplifier and plotter considerably. The beam no longer visibly deflected nor suffered from the terrible torsional problem.

Unfortunately, the academic now complained that the localised wheel loading effect could not be observed! Oh well, you cannot please them all of the time.

The next problem I had to solve was how to drive the plotter properly. The plotter had one axis wired to show the deflection signal and the other was set to move via an internal time-base, so the trolley had to travel quickly and at a constant speed to generate an accurate plot – not easily achieved.

It would be better for the second plotter axis to be fed the measured position of the vehicle along the bridge.

Our solution was to take a single piece of nichrome resistance wire and tightly stretch it parallel to, but insulated from, the rolled steel section. A pick-up finger was attached to the vehicle which could slide along the wire. So, the voltage drop could be detected and fed to the displacement axis of the plotter.

A significant current was fed through the nichrome wire (in the tens of amps), producing a voltage gradient across it, and the voltage signal from the vehicle pick-up was amplified and fed to the plotter.

Now it was possible to move the vehicle at a slow speed or even allow it to remain stationary, so that the students could observe exactly what was happening in the experiment.

Ray Smith,
Hoppers Crossing.

TDR Dongle modifications to cure ringing

I build Jim Row's TDR Dongle for Oscilloscopes (December 2014; siliconchip.com.au/Article/8121) but I had to make a minor modification to achieve good performance.

Upon powering the unit up initially, the output waveform rose to a plateau, but shortly thereafter exhibited significant ringing at around 10MHz on the positive voltage step, shown in the scope grab below.

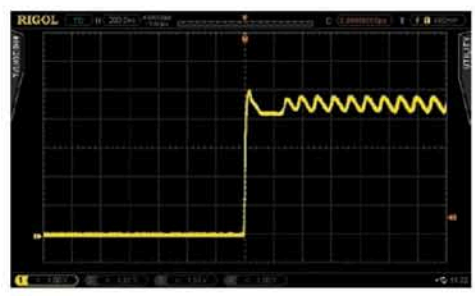

Testing with different power supplies, cables and scopes indicated that these were not to blame.

Careful examination of the circuit suggested that parasitic capacitance at the input to IC3 (the output amp, an OPA356) might be to blame, espe-

cially considering the very high bandwidth of this IC.

I connected a 4.7kΩ resistor from the inverting input of this IC (pin 2) to ground, which eliminated the ringing. The second scope grab below shows the cleaned-up waveform – about as close to perfect as you can get.

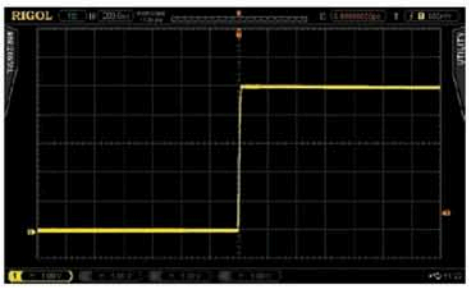

With this modification in place, I conducted tests on a 15m coaxial cable with various terminations and the results precisely matched expectations.

The easiest way to make this modification is to solder one end of the resistor to the junction of the 2kΩ resistor and 82pF cap, and the other end to the ground pin of the nearby SMA connector.

I would like to express my appreciation to Jim Rowe for designing such a useful and compact unit.

It will be an invaluable aid for demonstrating cable reflections and impedance terminations to University engineering students – something which is usually shrouded in mystery unless seen in operation.

John Leis,
Toowoomba, Qld.

Jim Rowe responds: this seems to be a good solution for anyone who experiences the same ringing problem.

I didn't experience that problem with my prototype. That may be due to component values and IC performance varying slightly from sample to sample.

Graphic analyser wanted as companion for graphic equaliser

I have been using my Playmaster Graphic Equaliser (*Electronics Australia*, May 1979) in conjunction with its companion Playmaster Graphic Analyser (*EA*, February 1980) since soon after those projects were published.

The graphic equaliser has developed a couple of dead bands and while it was out on the troubleshooting bench, I thought that maybe it was time to upgrade to your June/July 2017 design (siliconchip.com.au/Series/313).

The graphic analyser has great utility. It makes equalising the listening environment a breeze, so perhaps it is time for you to consider publishing a companion unit for the 2017 equaliser.

The 1980 analyser was a multiple-mode unit which was intended to become a permanent part of a hifi setup, doubling as a horizontal VU display or as a power meter.

But I have only ever used it as an analyser and it spends most of its life in the cupboard. As I play most of my material through my computer into my hifi system, I don't use the analyser's built-in pink noise generator.

Instead, I use an audio editor program on the computer to create a pink noise wave file which I play through the system for analysis.

May I suggest the following as a potential construction project? A battery operated, hand-held analyser with built-in microphone and multiple LED bargraph display, but no pink noise generator and no other novel uses designed in. It could be a useful instrument.

The Tinnitus/Insomnia Killer project from the November 2018 could be used as a pink noise source (siliconchip.com.au/Article/11308), or alternatively, a computer or smartphone.

Hopefully, there would be some reader interest in such a device.

Robert Allan,
Hunters Hill, NSW.

John Clarke responds: Thanks for the suggestion for a graphic analyser. With a suitable calibrated microphone, room acoustics and loudspeaker response could be adjusted using an equaliser to give a flat response. We will investigate the pros and cons of such a design.

Technology has changed since the 1980 analyser, meaning that it could be done in software. It may be difficult to justify a hardware-based analyser design due to the cost.

There are numerous spectral analyser software packages available such as www.techmind.org/audio/specanaly.html

You can use this to apply pink noise to your audio system and observe the response on the computer screen. A calibrated microphone would be required. SC

Wagner
ELECTRONICS SUPER STORE
OVER 40 THOUSAND PRODUCTS
ONLINE 1500+ PAGE CATALOGUE
AUSTRALIA WIDE SHIPPING

AUDIO/VISUAL ACCESSORIES
SPEAKERS / PRO AUDIO
ELECTRONIC COMPONENTS
DATA & ELECTRICAL
TOOLS & TEST EQUIPMENT
BATTERIES & MORE!

BUY ONLINE AT
WAGNERONLINE.COM.AU

VISIT OUR SYDNEY STORE
84-90 PARRAMATTA ROAD,
SUMMER HILL, NSW 2130
02 9798 9233

THE INCREDIBLE MISSIONS OF VOYAGER

The "Grand Tour"

In 1977, two Voyager spacecraft were launched from Earth: Voyager 2 on August 21 and Voyager 1 a few days later, on September 5.

Their mission? To probe the gas giant planets (Jupiter, Saturn, Uranus and Neptune) and beyond.

Amazingly, and beyond all expectations, their mission continues 41 years later (albeit with much of the on-board equipment shut down to conserve dwindling power).

Voyager 2 is now humanity's most distant object and travelling away from Earth at a speed of 62,000km/h (17km/second!).

Radio signals to or from Voyager, at the speed of light, take 20 hours – one way!

by Dr David Maddison

This background image, the crescent view of Jupiter, was taken by NASA Voyager 1 on March 24, 1979 – almost four decades ago! Regrettably, there will be no more pictures from Voyager – to save power its cameras were turned off in February 1990 – already way past its planned life!

Both Voyager spacecraft are still operational and sending back valuable data, using what would be regarded today as vintage electronics.

Voyager 2 is also now humanity's third most distant object, surpassed only by Pioneer 10, by a relatively small margin. But communications with Pioneer 10 were lost in January 2003.

Voyager 1 is now in interstellar space, ie, mostly beyond the influence of the Sun, including both its solar wind and magnetic field. It is in the space between star systems and as of going to press, Voyager 2 is now thought to be entering interstellar space as well.

The Voyager spacecraft were launched as a result of a once-in-a-lifetime opportunity.

In 1964, Gary Flandro of the Jet Propulsion Laboratory (JPL) in California made the observation that a particular alignment of outer planets Jupiter, Saturn, Neptune and Uranus (the gas giants) would enable a single spacecraft to visit all of them on a single mission, using the gravitational slingshot effect to go from planet to planet without needing extra fuel.

This trajectory became known as the "Grand Tour".

This special planetary alignment only occurs once every 175 years and was to occur in the later 1970s. The alternative was to send individual spacecraft to each of these four planets, at much greater expense.

NASA decided to send two spacecraft on the Grand Tour, with some slight differences between the two trajectories (see Fig.1). This would significantly reduce the time taken to visit the planets of interest and also allow additional post-launch options, such as the possibility for Voyager 1 to visit Pluto instead of Saturn's moon Titan. It also reduced the risk of a launch failure derailing the whole mission.

Voyager 2 was launched on 20th August 1977, before Voyager 1, which was launched on 5th September 1977. This is because they were numbered based on their expected arrival at Jupiter.

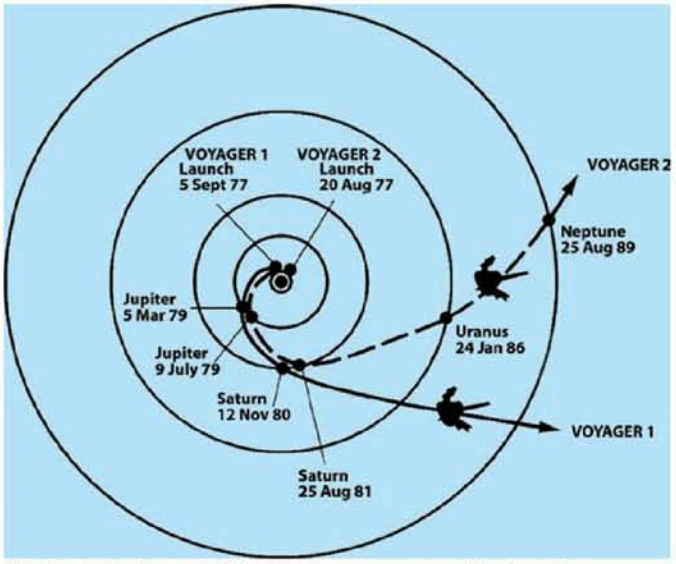

Fig.1: trajectories of the Voyager spacecraft, showing their close encounters with the gas giants which gave opportunities for taking photos and scientific observations as well as using the gravitational slingshot effect to make their way to the outer planets and beyond the solar system. Voyager 1 visited Jupiter and Saturn and made a close flyby of Saturn's moon Titan (considered more important than passing Pluto) while Voyager 2 visited Jupiter, Saturn, Uranus and Neptune.

Even though Voyager 1 was launched 16 days after Voyager 2, due to different trajectories, Voyager 1 arrived at Jupiter four months before Voyager 2.

The different trajectories provided the option for Voyager 2 to make close passes of Uranus and Neptune if desired, depending on scientific findings which were to be made along the way .

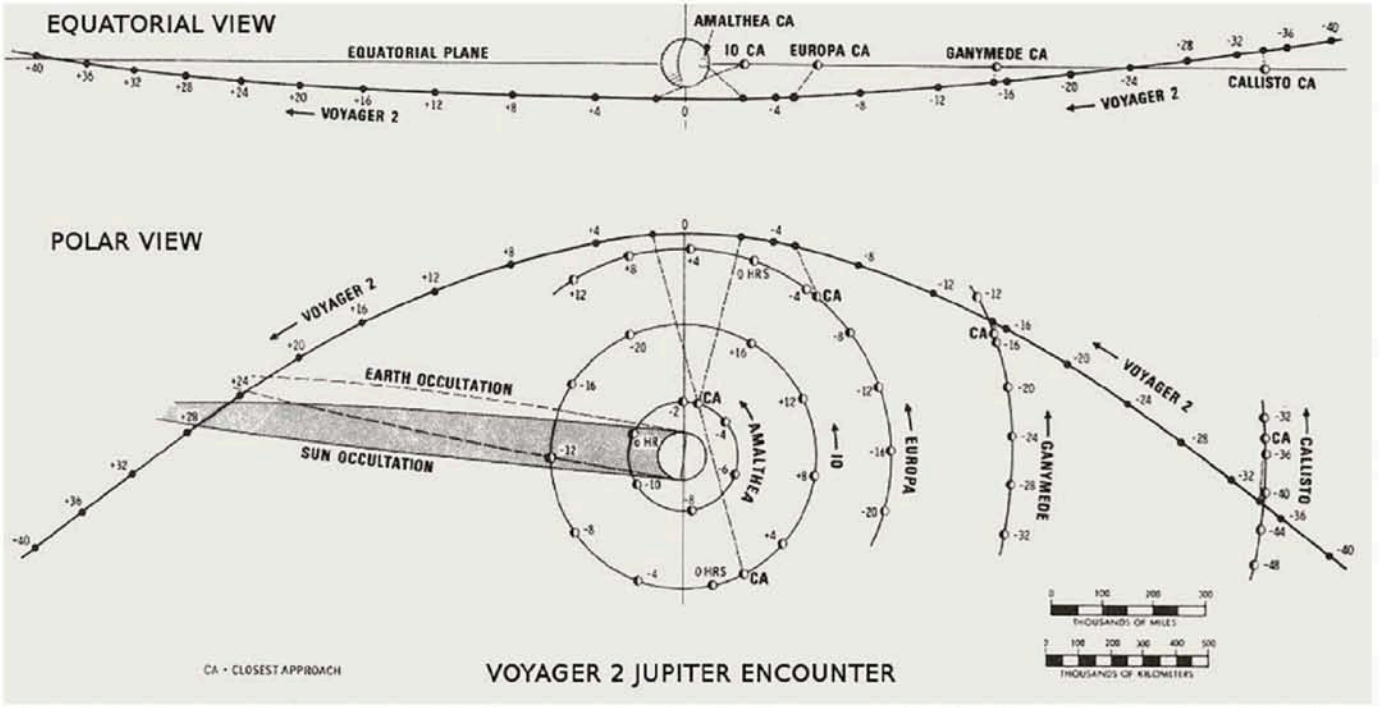

Fig.2: the trajectory of Voyager 2 for its Jupiter encounter, showing the many navigational considerations that had to be taken into account to maximise the information to be obtained.

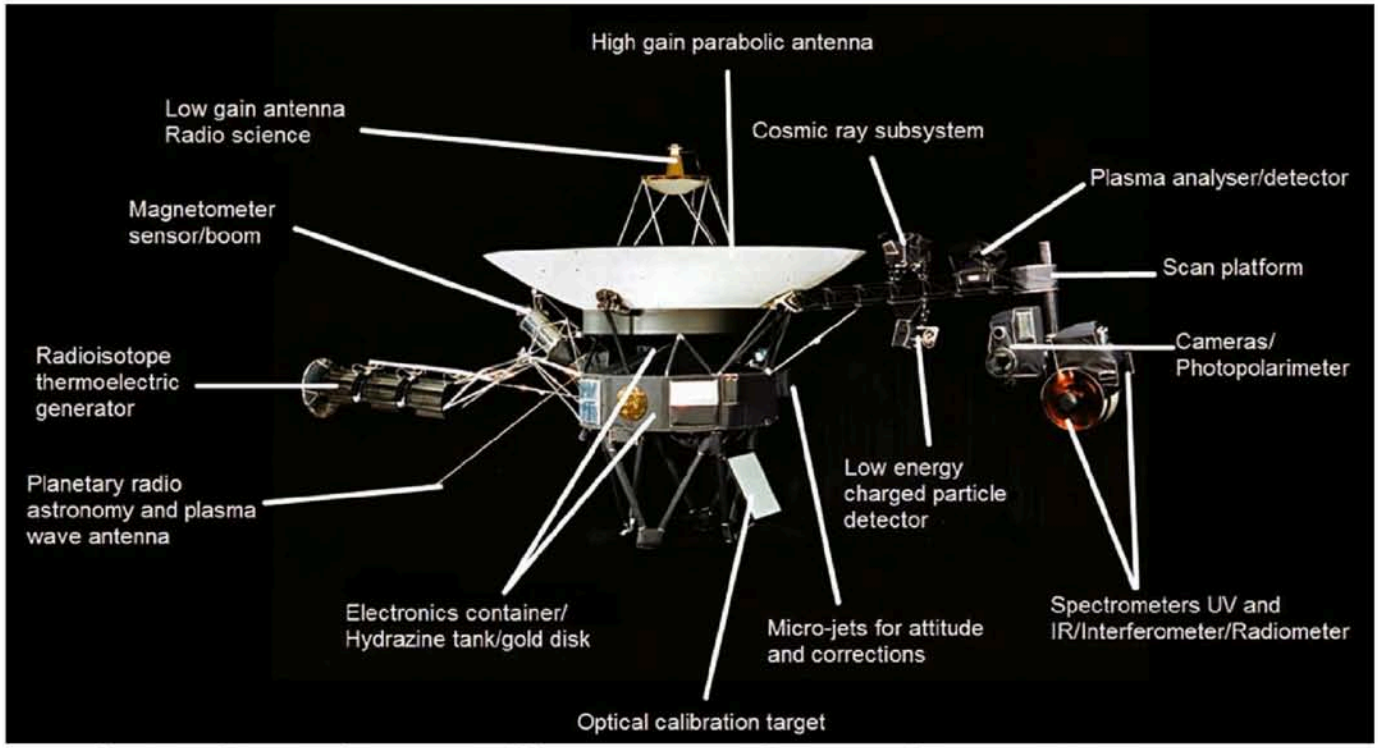

Fig.3: a depiction of Voyager showing some of the primary spacecraft systems and instruments.

A *much* longer mission than intended

The Voyager mission has been so successful that it has been extended a couple of times. The original primary mission of the Voyager program was to visit Jupiter and Saturn. Along the way, the probes made many important discoveries such as detecting volcanism on Jupiter's moon Io and finding unexpected intricacies in Saturn's rings.

The mission was then extended to allow Voyager 2 to visit Uranus and Neptune, which it did in 1989. Uranus and Neptune had not been visited before or since. After that, a further mission extension was granted to both spacecraft; known as the Voyager Interstellar Mission (VIM), its purpose is to explore the outer limits of the Sun's influence and further beyond.

The VIM is planned to extend to 2020 and possibly longer, subject to the availability of electrical power on the probes.

The journey to interstellar space

The graphic opposite shows the location of the Voyager spacecraft relative to our solar system. The heliosphere is the 'bubble' surrounding the Sun, extending well past the orbit of Pluto. It has its origins in the solar wind, the stream of charged particles constantly emitted from the Sun.

It is not a sphere; it is distorted into a teardrop shape due to the interaction of the heliosphere with the interstellar wind, the atomic particles moving past from interstellar space. Within the heliosphere, there is the termination shock, which is the sudden slowing of the solar wind from a speed of 300-700 kilometres per second to a much slower speed as it encounters the interstellar wind.

The heliosheath is the outer layer of the heliosphere, where the solar wind slows further, becoming denser and hotter as it interacts and 'piles up' against the interstellar wind. The heliopause is the point at which the pressure of the solar and interstellar winds are in balance and the solar wind turns around and flows down the teardrop tail of the heliosphere.

The bow shock is formed much like the bow wave of a boat, as the solar system moves through the atomic particles of the interstellar medium.

Voyager 1 is heading above the plane of the planets while Voyager 2 is heading below the plane. Voyager 1 is in the interstellar medium and has been since August 2012.

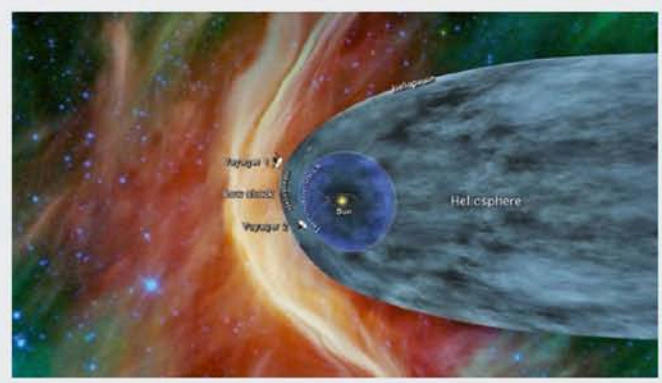

As of 5th October 2018, Voyager 2 is believed to be about to exit the heliopause due to an observed increase in cosmic ray activity. The exact time of transition cannot be predicted as the shape of the heliopause varies due to solar activity and its location with respect to the asymmetric heliosphere.

Pluto has an average distance from the Sun of 39.5 astronomical units (AU), where 1AU is the average Earth-Sun distance. Voyager 1 is currently at a distance of 144AU from the Earth and Voyager 2, 119AU.

For more details, see: https://bgr.com/2018/10/08/voyager-2-heliopause-interstellar-space/

Also see: www.jpl.nasa.gov/news/news.php?feature=7252

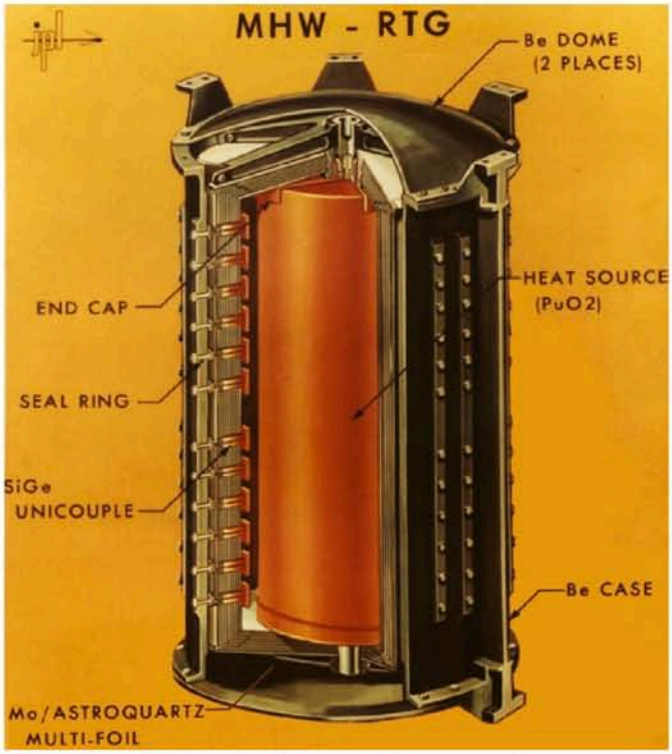

Fig.4: the Multi-Hundred Watt Radioisotope Thermoelectric Generator (MHW-RTG) as used on both Voyager spacecraft. At the start of the mission each unit provided 157W of electrical power (2400W thermal) and each spacecraft had three generators providing 471W at launch, diminishing all the time due to radioactive decay.

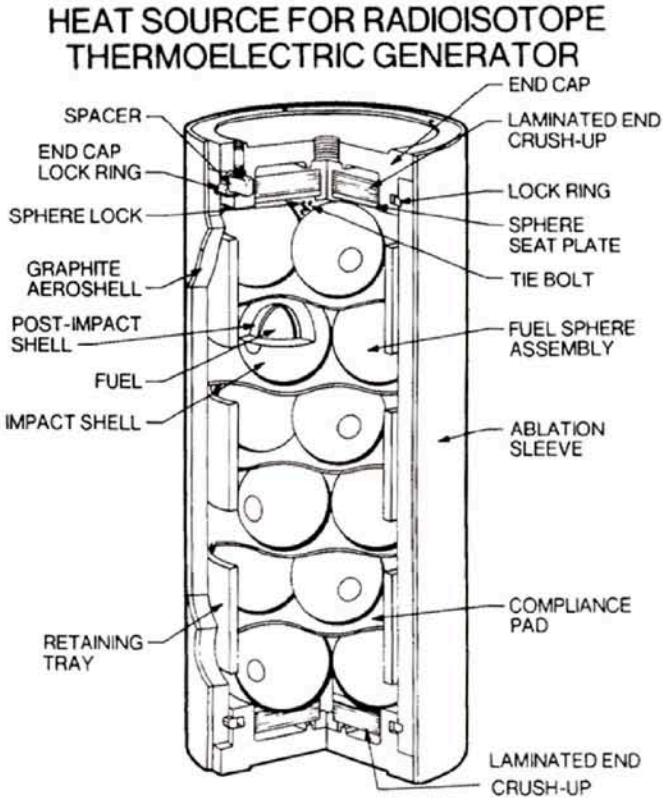

Fig.5: the plutonium fuel spheres within the MHW-RTG assembly, along with layers of protection to avoid contamination in the event of a launch accident.

The objective of the VIM is to obtain useful information on interplanetary and interstellar fields, particles, and waves. Between 2020 and 2025, the probes' remaining instruments will need to be shut down to preserve electrical power.

After 2025 (some reports say 2030), the decay of the nuclear fuel onboard the spacecraft will reduce their power supplies to the point that neither will be able to function and they will finally "go dark".

Spacecraft design

When they were designed in the early-to-mid 1970s, no spacecraft had yet been made to operate at such distances from the Earth.

Both spacecraft are identical and after ejection of their propulsion module weighed 825kg, 117kg of which is the scientific instruments (see Fig.3). All spacecraft systems were designed with high reliability and redundancy in mind. The craft are stabilised on three axes to ensure the antennas remained pointed toward Earth; the Sun and Canopus are used as guide stars.

Three separate onboard computer systems are used for different tasks, each having a backup system. Their magnetic tape data storage capacity is 536 megabits (a whopping 67 megabytes); enough to store 100 full resolution (800 x 800 pixel) 8-bit (256 grey scale) photos.

For power, each spacecraft has three plutonium-based radioisotope thermoelectric generators which initially provided a continuous 470W of electric power, although the power output is continuously diminishing due to radioactive decay.

A 3.66m high-gain antenna dominates the structure of each spacecraft and they also have a coaxial low-gain antenna for radio science observations. The bulk of the onboard electronics is contained within ten boxes which form a ten-sided structural "bus". They also carry hydrazine fuel for 16 thrusters.

Of the 16 thrusters, 4 are for trajectory correction and 12 are for attitude control. There are three pairs of primary attitude control thrusters and three more pairs of secondary thrusters for redundancy, giving a total of 12.

All thrusters are the Aerojet model MR-103, which are still in production today. They deliver 0.89N or 0.09kgf (kilogram-force) of thrust. The attitude control thrusters on the Voyagers have been fired hundreds of thousands of times during the mission but typically only "puffs" are emitted for milliseconds at a time, to make the tiniest corrections.

As a testament to the reliability of the thrusters, it was noticed in 2014 that the thrusters on Voyager 1 had been degrading in their performance and using more fuel than they should. It was decided to switch to the trajectory correction thrusters, which had not been turned on in 37 years (since the spacecraft's encounter with Saturn) and they worked perfectly. This measure saved fuel, extending the mission life of the craft by 2-3 years.

External to the bus are booms for the radioisotope generators, to keep their slight radiation as far from the sensitive instruments and spacecraft electronics as possible. There is also a scientific instrument boom, 2.3m long, containing most of the instruments (with a steerable platform at the end for the optical instruments) and a 13m long magnetometer boom.

The instruments are mounted on a boom as they are

Fig.6: this is what a radio telescope image of the radio signal from Voyager 1 looks like. The Very Long Baseline Array (VLBA) was used to capture this image on February 21st, 2013. The elongated shape is a consequence of the antenna configuration. The width of the radio signal shown is 1 milliarcsecond, or at the distance of 18.5 billion kilometres when the image was produced, about 80km.

radiation-sensitive and also sensitive to magnetic fields from the spacecraft. The nearest boom-mounted instrument to the generators is 4.8m away, with the spacecraft in between, and the closest platform-mounted instrument is 6.4m from the generators.

The steerable platform on Voyager 2 once got stuck as it swung around Saturn but the problem was fixed by sending a sequence of commands to turn the platform one way and then the other multiple times, to free it.

The thrusters are mounted on the outside of the bus, along with a combined planetary radio astronomy and plasma wave antenna system, comprising of two 10m-long elements mounted at right angles to each other. (Plasma is the fourth state of matter and is a gas in which atoms which have had some or all electrons stripped from them coexist with those electrons.)

There are also two star trackers, a calibration instrument and a golden record containing sites and sounds of Earth and other information about the origin of the spacecraft, in case an alien civilisation finds it (see opposite).

The high gain antenna is coloured white but the rest of the spacecraft is black and blanketed for thermal control and micrometeorite protection, while some areas are coated in gold foil and according to one claim, some areas are even wrapped in domestic kitchen-grade aluminium foil.

Appropriate operating temperatures for the electronics are maintained by a combination of electrical heaters, thermal blankets, radioisotope heaters (which generate about 1W of heat through radioactive decay) and thermostatically-controlled louvres in four of the ten electronics compartments.

Interesting Voyager Facts

Five trillion bits of data have been jointly transmitted by both Voyager spacecraft. That's enough data to fill seven thousand music CDs or over 4.5 terabytes.

The power of the radio signal *currently* received from the Voyager spacecraft on Earth is between about 10^{-14}W and 10^{-19}W. A modern basic digital watch consumes about 10^{-6}W (1 microwatt) so the signal power received is between *100 million times and 10 trillion times* lower.

Here are some informative documentaries about the Voyager probes on YouTube:

https://youtu.be/xZIB8vauWSI
https://youtu.be/seXbrauRTY4

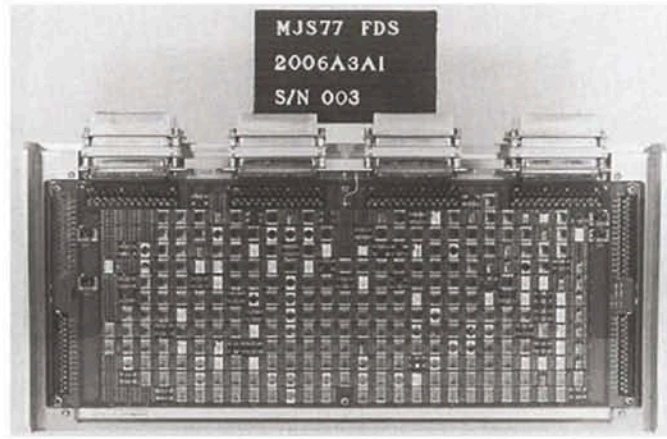

Fig.7: the Flight Data System (FDS) computer used in the Voyager spacecraft.

Power system

Due to the extreme distances from the Sun and the long duration of the mission, currently expected to be 48 years total, there is no possibility of using solar panels or batteries for spacecraft power. The only viable power source is a type of nuclear reactor called a Radioisotope Thermoelectric Generator (RTG).

At the start of the mission, the Voyager probes needed 400W of electrical power and the device to produce this is called the Multi-Hundred Watt RTG or MHW-RTG (see Fig.4).

This power source has no moving parts and works by converting radioactive decay heat to electricity by many thermocouples arranged in thermopiles. Each thermocouple generates a small direct current from the temperature difference across the junction of two dissimilar metals. The heat comes from the radioactive decay of spheres containing plutonium-238 (Fig.5).

When the outputs of these thermocouples are combined, a substantial amount of electrical power is produced.

Would the Voyagers be much different if built today?

If the Voyager spacecraft were built today, they would be similar in many respects; the basic layout, type of instruments, thermal control and power source would likely be very similar. But the computers would probably be very different, given the chips with much larger computing power and memory available today.

The cameras would also be much more sensitive to light and have higher resolutions as they would use solid-state imaging sensors rather than tubes.

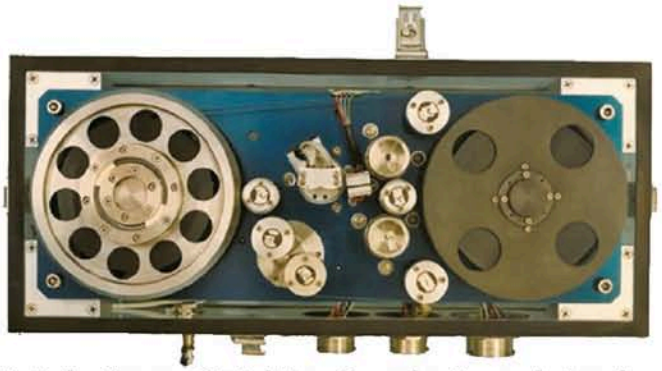

Fig.8: the Voyager Digital Tape Recorder. It was designed with extreme longevity in mind.

Safety was always a consideration, so to avoid the possibility of radioactive contamination in the event of a launch accident, the fuel is surrounded by many strong protective layers.

Telemetry system

Signals from Earth are sent on the S-band (2-4GHz) and signals are sent back to the Earth on the X-band (8-12GHz) at up to 21.3W. There is also a 28.3W S-band backup for the downlink.

During the Jupiter encounter, data was sent back to Earth at 115,200bps and from Saturn at 44,800bps. The difference is due to the extra distance to Saturn as received power decreases due to the inverse square law, hence the lower data rate.

Today, data is received at just 160bps due to the extreme distance.

Data is received by the NASA Deep Space Network (DSN) which comprises receivers in Goldstone, California; Madrid, Spain; and Canberra (see Fig.6).

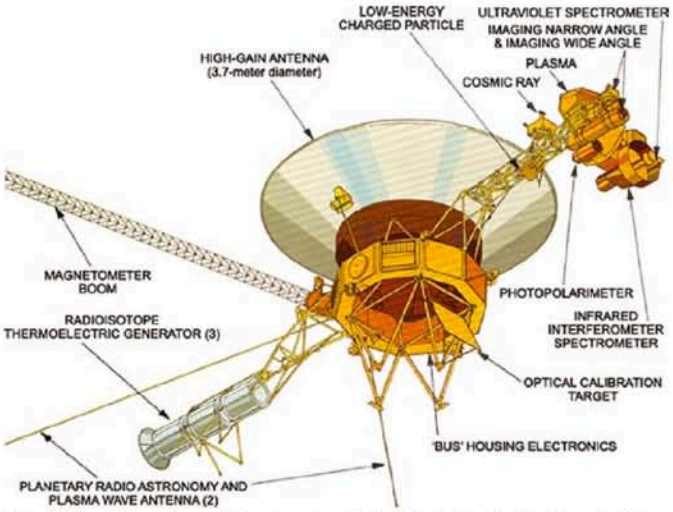

Fig.9: the 11 science instruments (which include the radio antenna), a photo calibration target and the radioisotope thermoelectric generator, mounted far away from the scientific instruments to avoid interference.

Voyagers' Golden Record

In case an alien civilisation ever encounters these spacecraft, there is a gold-plated copper record that contains 115 images (plus a calibration image) and a variety of sounds of Earth along with a plaque with instructions for playing the record and indicating the origin of the spacecraft.

The record is also coated with ultra-pure uranium-238, which decays into other elements over time, enabling the age of the spacecraft to be determined. As a courtesy to aliens, a stylus is even supplied with the record!

The audio stored on the record is about 54 minutes long and the images have a resolution of 512 lines.

A video showing the images (with the video author's own soundtrack) can be seen at: https://youtu.be/50HN6HAmeis

Parts of the audio track can be found on YouTube, but not a complete playlist. There is a video of the story of making the record at: https://youtu.be/MxOeNqlNNvw

A copy of the record can be purchased from various sources including https://ozmarecords.com/

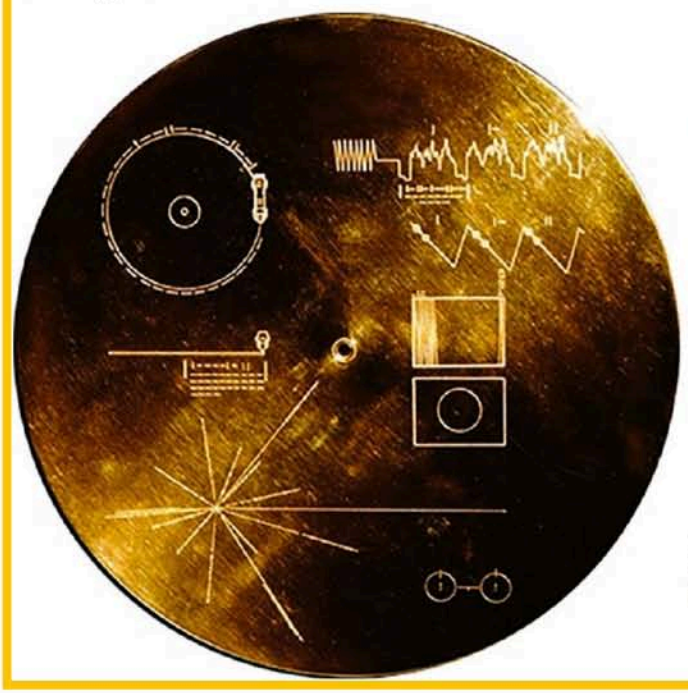

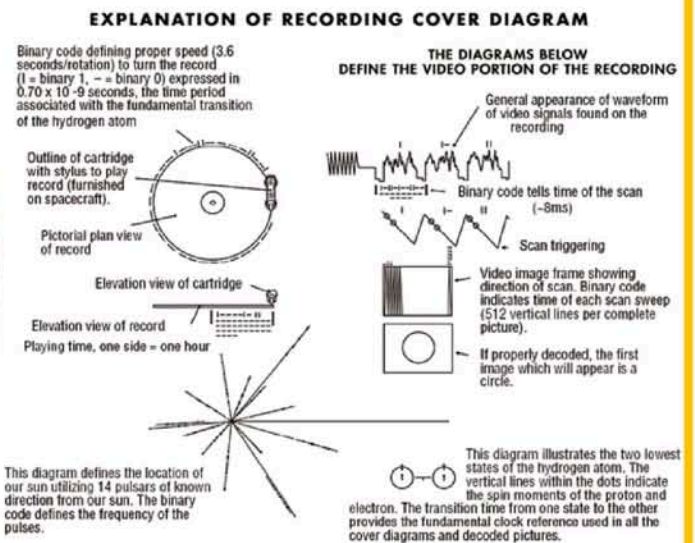

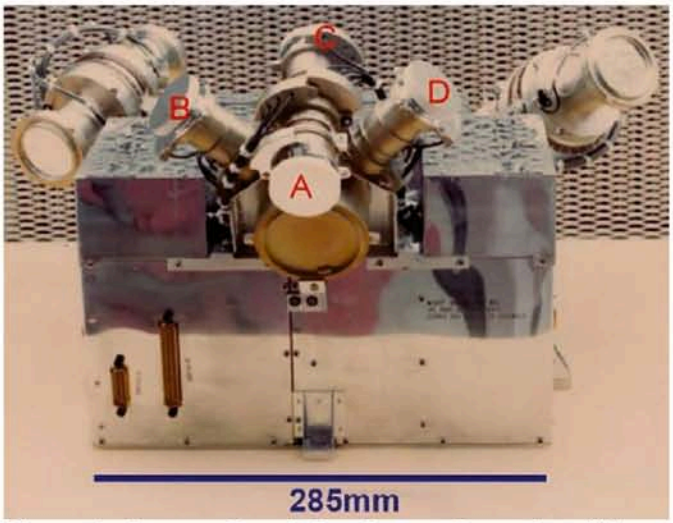

Fig.10: the Voyager Cosmic Ray System. It consists of three different types of instruments: four low-energy telescopes (LETs), facing in a variety of directions; two double-ended high-energy telescopes (HETs) at far left and far right; and the electron telescope (TET), directly beneath LET A.

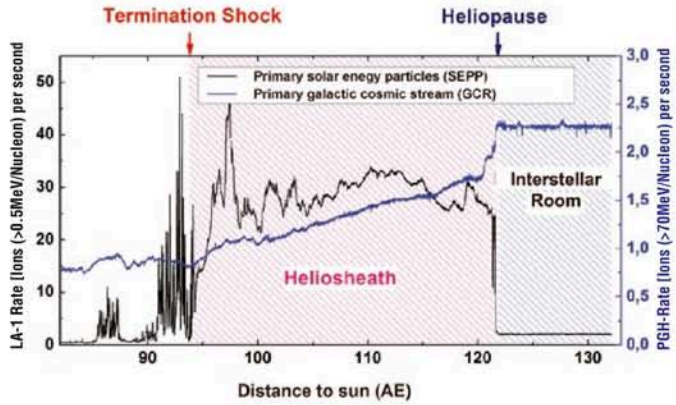

Fig.11: data from 2012 showing Voyager 1 crossing through the heliosheath into the interstellar medium. Voyager 2 is seeing similar radiation patterns now as it enters the interstellar medium. You can see live updates for the radiation measurement instruments for both spacecraft at https://voyager.gsfc.nasa.gov/data.html *Source: Wikipedia user Stauriko.*

These receivers have occasionally been supplemented by others such as Parkes Radio Telescope, NSW and the Very Large Array, New Mexico. Also, the antennas of the DSN have been upgraded over time, plus new software has been sent to the Voyagers to implement some data compression.

Onboard computer systems

The Voyager computer systems are based partly on the computer system used on the Viking Orbiter spacecraft which went to Mars in 1976, a decision based on budgetary restrictions and a desire for standardisation. For Voyager, this computer was called the Computer Command System (CCS) with additional computers added being the Flight Data System (FDS) and the Attitude Articulation Control System (AACS).

None of the computers on Voyager use dedicated microprocessors; they are instead built from discrete logic ICs. The Voyager computers have a total of 69.656kB memory if both memory banks in each computer are counted.

The CCS is the "master" computer and is responsible for memory management and commands sent to the FDS and the AACS. It uses almost identical hardware to the Viking computer but runs heavily revised software. Due to its capability of in-flight reprogramming, the code has been im-

Preparing the spacecraft for the Voyager Interstellar Mission (VIM)

Both spacecraft have exceeded their expected mission durations by a long margin. Many preparations have been made to upload new software and shut down various instruments and services to reduce the electrical load, to compensate for the diminishing power output of the nuclear power sources. Their power output is diminishing by about 4W/year.

The most important mission requirement is to maintain each spacecraft's High Gain Antenna pointed to Earth. This requires that the thrusters which make tiny changes to spacecraft attitude continue working.

A second requirement is that software instructions must be sent to enable the spacecraft to continue to operate autonomously, with programmed sequences of events to perform and to return data, even if the spacecraft lose their ability to receive command signals from Earth.

The table at right shows the electrical loads on Voyager 1 that have so far been turned off to save power since the VIM started.

Further planned shutdowns include termination of Digital Tape Recorder operations (already shut down on Voyager 2) and shutdown of the gyros for normal operations, to be powered up only when needed. After 2020, the remaining operational instruments will be turned off permanently or periodically turned on and off to share the remaining electrical power.

There is enough fuel for attitude control to last until 2025. Beyond 2025, there is just one remaining task for the Voyagers and that is to carry information to possible intelligent spacefaring alien species, who may find the spacecraft and discover that they are not alone.

Voyager 1 Load	Power Saved	Turned Off
IRIS Flash-off Heater	31.8W	1990
WA Camera	16.8W	1990
NA Camera	18W	1990
PPS Supplemental Heater	2.8W	1995
NA Optics Heater	2.6W	1995
IRIS Standby A	7.2W	1995
WA Vidicon Heater	5.5W	1998
NA Vidicon Heater	5.5W	1998
IRIS Science Instrument	6.6W	1998
WA Electronics Replacement Heater	10.5W	2002
Azimuth Actuator Supplemental Heater	3.5W	2003
Azimuth Coil Heater	4.4W	2003
Scan Platform Slewing Power	2.4W	2003
NA Electronics Replacement Heater	10.5W	2005
Pyro Instrumentation Power	2.4W	2007
PLS Science Instrument	4.2W	2007
IRIS Replacement Heater	7.8W	2011
Scan Platform Supplemental Heater	6.0W	2015
UVS Replacement Heater	2.4W	2015
UVS Science Instrument	2.4W	2016

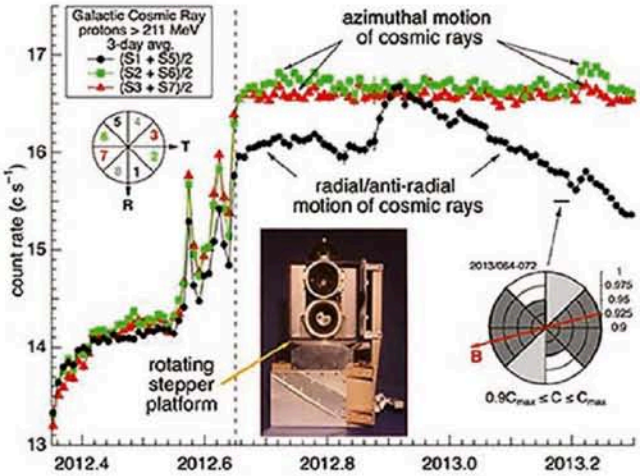

Fig.12: LECP data for Voyager 1, showing an increase in galactic cosmic rays as the spacecraft enters interstellar space. The data points are obtained from many different angles by rotating the detector platform. *Source: NASA/ JPL-Caltech/JHUAPL.*

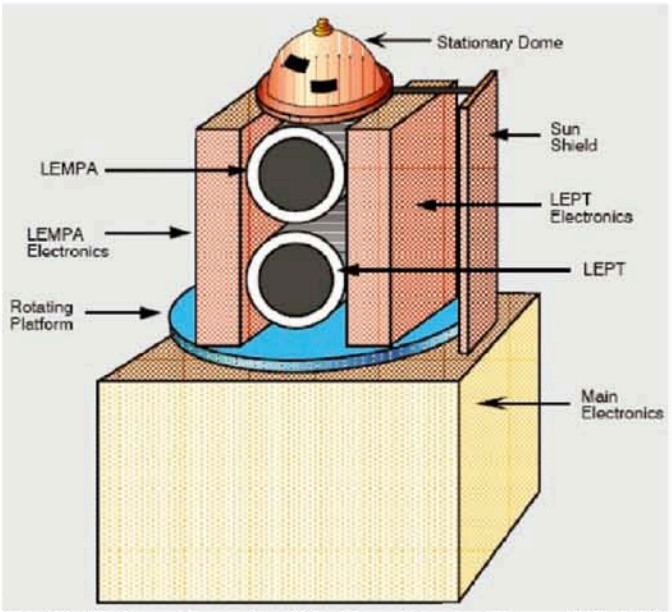

Fig.13: the key elements of the Low Energy Charged Particle instrument.

proved continuously over time.

The CCS can execute 25,000 instructions per second and has two independent memory banks of 4096 18-bit words of non-volatile plated-wire memory (a variation of core memory).

As mentioned earlier, there is a duplicate of each computer system on each spacecraft, in case one fails. The CCS is also compartmentalised so that if one part of one CCS fails, it can use the good part in the other CCS.

The duplicate CCS computers can operate in three modes: individual, where each CCS performs independent tasks; parallel, where each CCS works on a task together; or tandem, where the same task is performed by each CCS and the results are cross-verified. The latter was used during close encounters with the planets where an error could be disastrous.

The FDS is the system which collects, formats and stores all engineering, scientific and telemetry data. If the amount of data collected exceeds the capacity to transmit it back to Earth, excess data is stored on magnetic tape until downlink capacity is available.

The FDS contains two banks of 8192-word 16-bit CMOS RAM and can execute 80,000 instructions per second (see Fig.7).

The FDS was the first spacecraft computer to use volatile CMOS RAM which requires constant power to maintain the memory. Even a momentary loss of power would mean a complete loss of memory. To ensure constant power to the FDS, each unit has a dedicated power line from the radioisotope generators.

It was decided that no further redundancy was required because if power was lost from those for whatever reason, the mission had no hope to continue in any case.

The reason for having separate CCS and FDS systems is the high data rate from sensors such as cameras. The CCS may have been overwhelmed by the amount of data but the FDS was explicitly designed to handle it. However, these were the last spacecraft where the two functions were handled by separate computers. Like the CCS, the FDS can be reprogrammed in flight.

The AACS is a modified CCS and is used to control the scan platform stepper motors, thruster actuators, handle attitude control and implement thruster logic. It has a crucial task which is to keep the spacecraft antennas pointed toward Earth. The AACS has two banks of 4096, 18-bit words plated wire memory.

All the software was originally written in Fortran 5. Later software was written in Fortran 77 and later again in C.

One problem in later years of the mission was to find programmers who were familiar with these languages.

For more information, see: **http://forums.parallax.com/discussion/132140/voyager-1-2**

The data storage system

For times when data was being acquired faster than it can be transmitted back to Earth, such as during planetary encounters where many photos were being taken, excess data was recorded on a digital tape recorder (DTR) – see Fig.8.

In addition to image data, every week, each spacecraft records 48 seconds of high-rate plasma wave system (PWS) data at 115.2kbps. This data is recorded on the tape and transmitted back to Earth once every six months.

The long delay between transmissions is due to competing resources in the NASA Deep Space Network (DSN) required to receive the data and the fact that the primary mission of the spacecraft has been completed. The operation of the DTR on Voyager 2 was ended in 2007 due to a failure of the PWS, which occurred in 2002.

The operation of the DTR has either been terminated (or soon will be) on Voyager 1 this year due to the inability to receive its data at 1.4kbps, which is the minimum speed it can transmit on its telemetry channel.

At a distance from Earth of 19 light hours, the maximum data rate which can be received is much lower than this. As mentioned above, the currently possible rate is around 160bps on the 34m radio telescopes within the DSN; it is somewhat higher on a 70m radio telescope.

The tape recorders were designed to be extremely robust and reliable. The tape heads were designed to last for several thousand kilometres of tape travel.

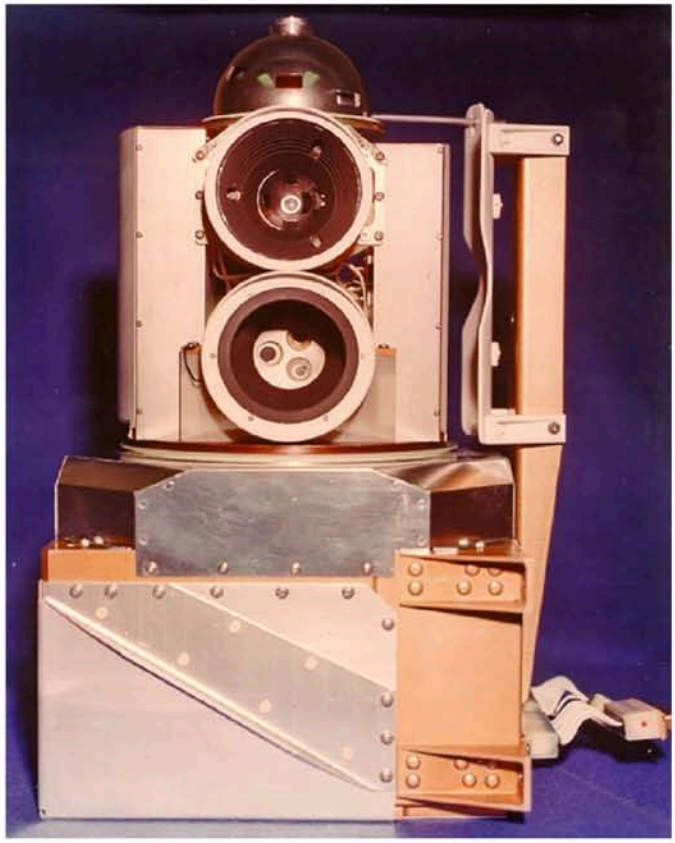

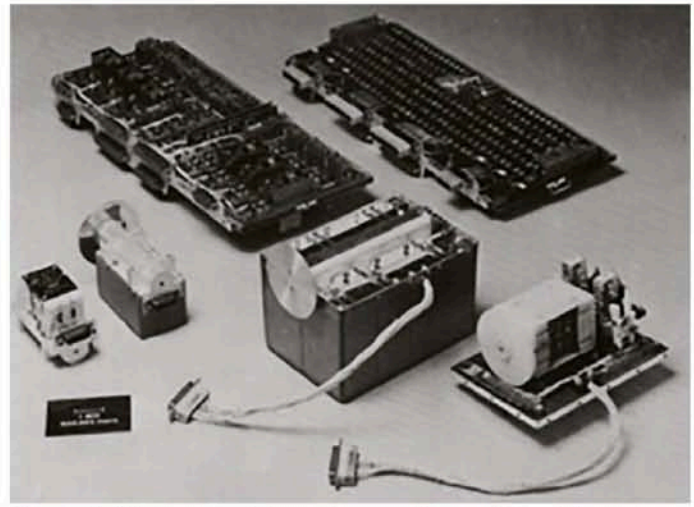

Fig.14 (left): the actual Low Energy Charged Particle instrument in Voyager.

Fig.15 (above): a 70s-era photograph of the Fluxgate magnetometer system used in Voyager spacecraft.

Scientific instruments

The Voyager spacecraft have ten dedicated scientific instruments and also used the spacecraft's communications system for certain investigations, for a total of eleven (see Fig.9). A description of each system follows. Four instruments are still operational on Voyager 1 and five on Voyager 2.

1. Cosmic Ray System (CRS) (operational)

The CRS is still running on both spacecraft and measures both cosmic rays and other energetic particles from outside the galaxy, the Sun and particles associated with the magnetospheres of planets. It has a wide range of energy resolutions and one of its functions is to study the solar wind.

It comprises three different types of instrument, to measure different energy levels and also to determine the direction of the particles detected (Fig.10).

All instruments in the CRS are based around solid-state detectors.

The CRS was instrumental in determining the location of the heliosphere's termination shock, the heliosheath, the heliopause and Voyager's entry into interstellar space (see Fig.11).

2. Low-energy charged-particle (LECP) experiment (operational)

This instrument is still running on both spacecraft. It detects sub-atomic and atomic particles such as electrons, protons and alpha particles along with elements around planets, in interplanetary space and now interstellar space. These particles may originate from the Sun, galactic cosmic rays or planets.

It consists of two subsystems, the Low Energy Magneto-spheric Particle Analyzer (LEMPA) and the Low Energy Particle Telescope (LEPT) – see Figs.12, 13 & 14.

This instrument helped establish the shape of the magnetospheres of Saturn and Uranus and establish the point of transit of the spacecraft into interstellar space, along with the CRS.

3. Magnetometer (MAG) (operational)

The magnetometer instrument is still running on both spacecraft. Each spacecraft carries two low-field magnetometers that measure from 0.002nT to 50,000nT and two high-field magnetometers that measure from 12nT to 2,000,000nT (2000μT/2mT). By way of comparison, the Earth's magnetic field is between 25,000nT (25μT) and 65,000nT (65μT) at the surface.

The magnetometers are located at various positions along a 13m-long boom to minimise interference from spacecraft electronics. The purpose of the magnetometers is to measure the magnetic field of the Sun, planets, moons and currently, interstellar space.

Among the many discoveries made by the MAG were the magnetic fields of Uranus and Neptune, which are not aligned with the planets' rotational axes, and are of a similar strength to Earth's. It has also detected strong magnetic fields outside the solar system.

4. Plasma Science (PLS) experiment (operational on Voyager 2 only)

This system is still running on Voyager 2 but has failed on Voyager 1. The purpose of this experiment is to determine how the solar wind varies with distance from the Sun, study the magnetospheres of the planets, study the moons of the planets and detect interstellar charged particles (see Figs.16 & 17).

5. Plasma Wave Subsystem (PWS) (operational)

The PWS uses two 10m-long dipole antennas mounted at right angles to detect the electric field from plasma near planets and the interplanetary and now interstellar medium, in the frequency range of 10Hz to 56kHz.

The same antenna system is also used by the PLS. A recording of plasma waves as Voyager 2 encountered Neptune may be heard at https://youtu.be/dJ8Dz5ZmqGM

6. Imaging Science System (ISS) (switched off)

The Voyager spacecraft each have a wide-angle and narrow-angle video camera mounted on a moveable scan platform. Each camera is equipped with several different

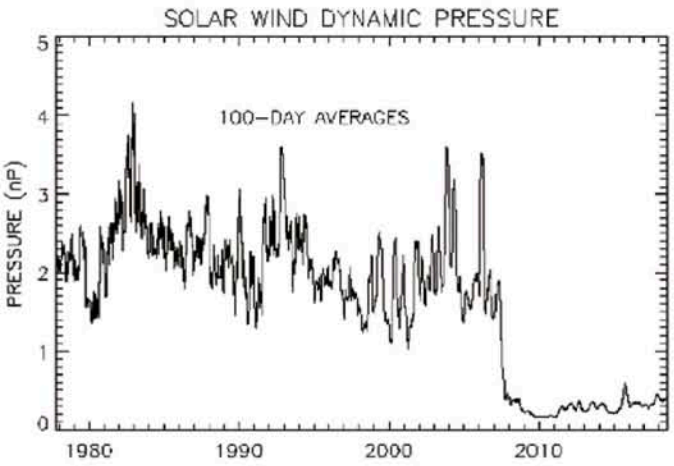

Fig.16: the Solar wind pressure on Voyager 2 throughout the mission, as measured by the PLS. Note the dramatic decrease in 2007. This happened after the spacecraft passed the termination shock and entered the heliosheath. It did this much earlier than Voyager 1 due to the asymmetric shape of the heliosphere, caused by the interstellar magnetic field.

filters that can be selected as necessary, which are selective for specific wavelengths of light, including wavelengths associated with chemical elements and compounds.

The wide-angle camera has filters on a colour wheel selective for Blue, Clear, Violet, Sodium (589nm), Green, Methane (541nm and 619nm) and Orange. The narrow-angle camera has filters for Clear, Violet, Blue, Orange, Green and Ultraviolet.

The wide-angle camera has a 200mm focal length with a 60mm objective and aperture of f/4.17 while the narrow-angle camera has a 1500mm focal length with a 176mm objective and aperture of f/11.8.

The cameras use a monochrome vidicon TV tube (model B41-003; see Fig.18) made by General Electro-dynamics Co, which is a storage tube that can store a high-resolution video image for 100 seconds. The image area in the tube is 11.14mm x 11.14mm, consisting of 800 lines with 800 pixels per line.

After a picture is taken, 48 seconds is required to electronically read the image, after which the image is cleared by flooding the tube with light to prepare for the next picture. The greyscale images are sampled with eight bits per pixel, so they required 5,120,000 bits of storage space (640kB) on magnetic tape for transmission back to Earth.

As mentioned earlier, images of Jupiter could be transmitted back to Earth at 115,200bps while images of Saturn were sent at 44,800bps, so each image of Jupiter took 44 seconds to transmit, and 114 seconds for Saturn. Colour images were generated by merging images taken with various filters on the colour wheel.

Some of the many discoveries made with the ISS are the great turbulence in the Jovian atmosphere, the intricate patterns in Saturn's rings, vulcanism on Jupiter's moon Io and an indication of an ocean beneath the ice of Jupiter's moon Europa.

The cameras on both spacecraft were turned off decades ago due to a lack of sufficient light for useful imaging, the lack of objects to image and to save power. Voyager 1 took its last photo (mosaic) in 1990, the famous "Solar System Family Portrait" while Voyager 2 took its last photos when it encountered Neptune in 1989.

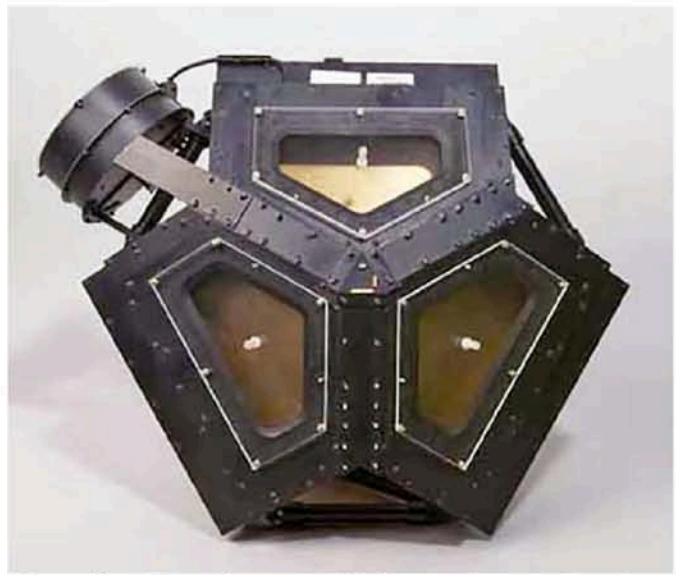

Fig.17: the plasma detector, which comprises two Faraday Cups.

7. Infrared interferometer spectrometer and radiometer (IRIS) (non-operational)

Infrared light is outside the visible range, at the red end of the spectrum. It is absorbed by various molecules and the extent of absorption at various wavelengths can be used to determine their chemical composition.

The IRIS has three functions. It can determine the presence of various compounds in planetary and moon atmospheres, determine the temperature of the various bodies and can measure the total amount of light reflected from the bodies.

8. Photopolarimeter Subsystem (PPS) (failed)

When non-polarised light from the Sun is reflected or refracted by various materials, such as ice crystals in a planet's atmosphere, it acquires a polarisation. Polarising filters block light with certain types or orientations of polarisation, selectively allowing light with a specific polarisation through.

Voyager's PPS was designed to image planetary atmospheres, rings and their moons' surfaces using a 150mm focal length telescope and various colour and polarising filters (a total of 40 combinations

Why didn't Voyager explore the Kuiper Belt?

There are three mains reasons why the Voyager probes did not gather data on the Kuiper Belt, a region between about 30AU and 50AU from the Sun which contains many small bodies, remnants from the formation of the solar system.

1) The Kuiper belt was unknown when the spacecraft were launched; it wasn't discovered until 1992, Voyager 1 had already passed it when it was discovered and Voyager 2 was well into it.

2) The Voyager imaging system would not have been sensitive enough to make out the small objects in the Kuiper Belt.

3) The only telescope that could have found objects for Voyager to investigate was not working correctly at the time (Hubble).

NASA's New Horizons mission is currently investigating these objects. Further details are at:

https://blogs.nasa.gov/pluto/2018/02/28/the-pis-perspective-why-didnt-voyager-explore-the-kuiper-belt/

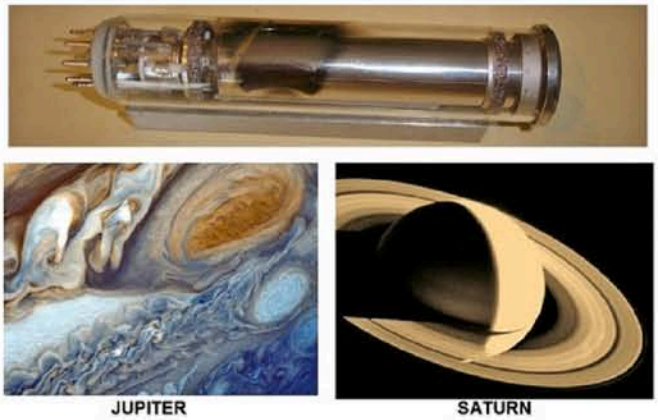

Fig.18: a Vidicon tube, as used in the Voyager cameras, along with sample images. *Courtesy www.digicamhistory.com*

were possible). It was used to distinguish between rock, dust, frost, ice and meteor material and obtain information about textures, compositions and distribution of particles such as in clouds and rings.

Unfortunately, the instrument on Voyager 1 failed before the Jupiter encounter and none of the data was ever archived, so it was turned off.

The PPS on Voyager 2 also suffered multiple failures and was of limited use but it was used to watch stars dip behind the rings of Saturn, Uranus and Neptune, to examine their structure and behaviour.

9, Planetary Radio Astronomy (PRA) (non-operational)

The PRA experiment is a radio receiver that covers two frequency bands, from 20.4kHz to 1345kHz and from 1.2MHz to 40.5MHz. It was designed to detect radio emissions from the planets, including those from lightning and plasma resonance. It uses and shares with the PWS the two 10m-long antennas mounted at right angles to each other, in a "V" shape.

10. Radio Science System (RSS) (non-operational)

The RSS used the Voyager communications system to pass radio signals through planetary and moon atmospheres and ring systems, which were then picked up by receivers in the Deep Space Network to determine atmospheric and ring properties. This technique is generally known as radio occultation.

The system can also be used to precisely determine the spacecraft trajectory so the shape, density and mass of nearby bodies could be determined.

11. Ultraviolet spectrometer (UVS) (non-operational)

UV light is just outside the visible spectrum at the blue end and is responsible for causing sunburn.

The UVS was used to measure the distribution of major constituents in the atmospheres of planets and moons, the absorption of UV light by bodies with atmosphere as the sun is occulted, the UV "airglow" emissions of various bodies and the distribution of hydrogen and helium in space. SC

Mission status, data and communications activity

You can view the real-time mission status of the Voyage probes at: https://voyager.jpl.nasa.gov/mission/status/

Data from all instruments are freely available on a variety of websites, so if you have a theory you want to test, you are welcome to do so. A good place to start is https://voyager.jpl.nasa.gov/mission/science/data-access/ but be aware that many data links are outdated or not working. However, if you look hard enough, you will find current data.

If you want to check if the Deep Space Network is transmitting or receiving data with Voyager, you can go to https://eyes.nasa.gov/dsn/dsn.html and look for codes VGR1 (Voyager 1) or VGR2 (Voyager 2). See recent image below.

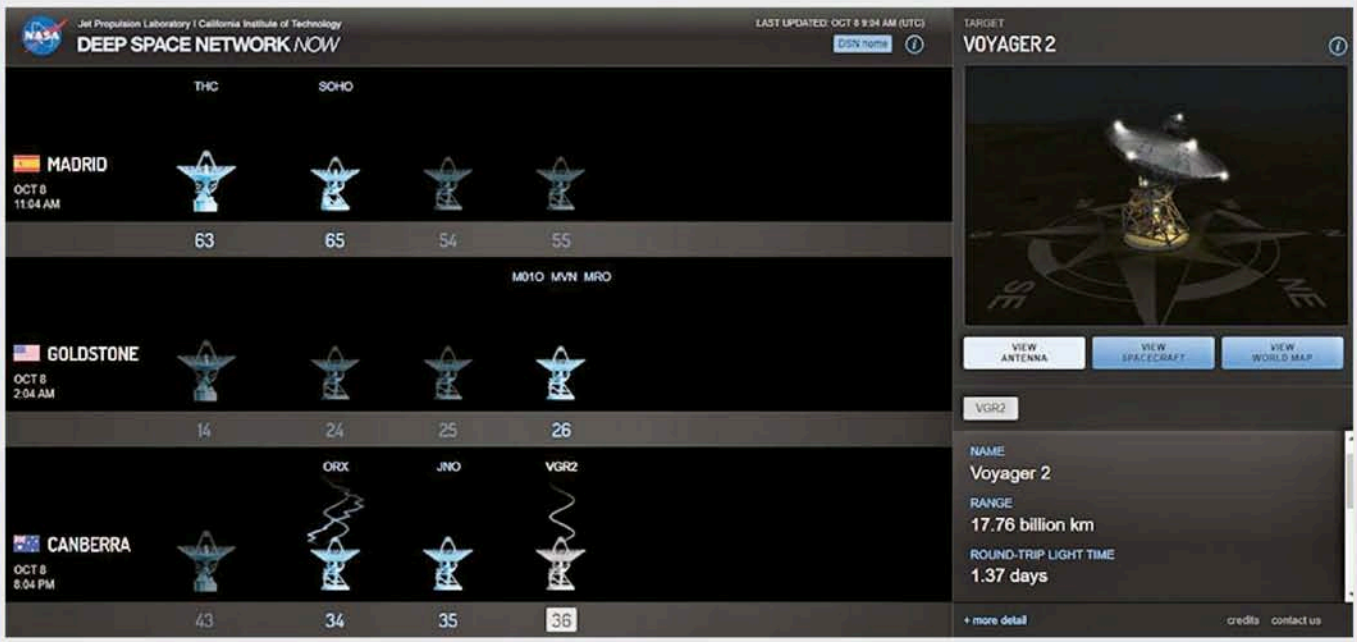

Fig.19: the Deep Space Network status on 8th October 2018, showing the Canberra DSN station receiving data from Voyager 2 at 8.44GHz with a power level of -108.42dBm (1.44 x 10^{-14}W). The typical data rate is currently 160bps. Data is transmitted from Earth at around 19kW. On 9th October 2018, the Goldstone DSN station in California received data from Voyager 1 with an astonishingly low received power of -152.44dBm or 5.70 x 10^{-19}W!

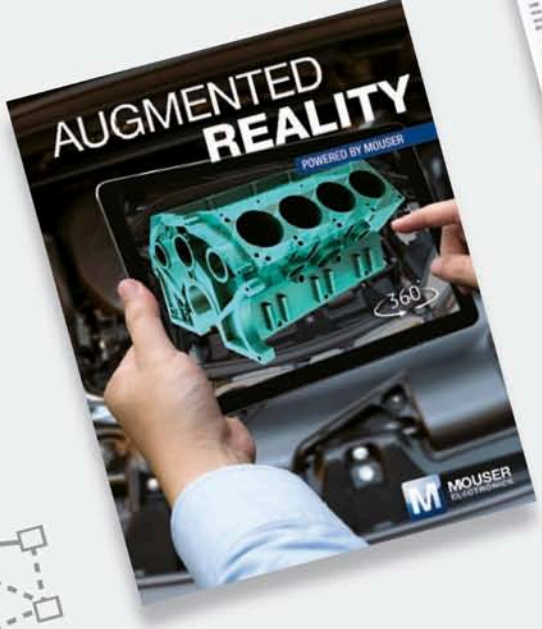

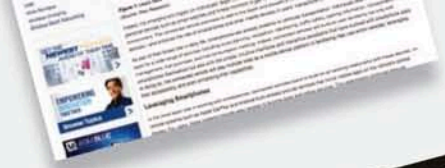

APPLICATIONS & TECHNOLOGIES

View articles, ebooks, videos, whitepapers and more on the latest industry applications

MOUSER ELECTRONICS.

au.mouser.com | australia@mouser.com

Extremely Sensitive Magnetometer

It might not look much like your traditional metal detector. It's not! But for ferrous metals, its sensitivity is on a par with – or better than – some of the best commercial designs. We've found this magnetometer-based design can find ferrous metallic objects smaller than the head of a pin!

by Rev. Thomas Scarborough

Features

- Highly sensitive – will detect magnetic field strength changes of around three nanoTeslas!
- Fast start-up (about ten seconds)
- Complete immunity to stationary magnetic fields
- Differential (two-channel) design for a high degree of immunity to magnetic "noise"
- 12V battery powered . . . or 12V DC plugpack
- Uses common components
- Easy initial set-up (takes about ten minutes)
- Easy to use (mostly controlled by a single knob)

This design is a major revision of an earlier detector which was published in Europe more than a decade ago. (*Elektor, May 2007*)

That was described as an "incredibly sensitive" design . . . but this one is significantly more sensitive!

Three significant improvements have been made compared to that older design:

- A second channel has been added, to cancel out spurious signals
- It has triple the number of amplification stages
- It adds a relay switch, where the earlier design only had a LED readout

The advantage of two channels is that magnetic pulses picked up by two channels will cancel each other out, while those detected by only one channel – or predominantly one channel – will trigger the relay.

Also, temperature and power supply variations will have much less effect. This dramatically increases stability and sensitivity, especially in the presence of magnetic "noise".

The advantage of a relay switch is that the magnetometer may be put to good use by switching things. This device is not merely for making your fortune . . . for example, it could sound a remote alarm when a vehicle approaches.

Having said all that, this magnetometer uses common components and is easy to set up and use.

But it is a serious machine. When carefully adjusted, it will detect changes in magnetic fields down to about 3nT (nanotesla) or 30 microgauss. That puts it on a par with some of the best commercial designs. It will, for example, detect metallic objects which are smaller than the head of a pin.

Measuring its sensitivity

It's difficult to measure the sensitivity of a device like this without specialised equipment. But using some clever techniques, it is possible.

For example, it is possible to generate a weak magnetic field of any desired strength by placing a magnet with a known field strength some distance away from the device. The field strength of common types of magnets can be determined based on the material and size.

Magnet thickness (inches)	Magnet diameter (inches)													
1/16	0.3	0.4	0.5	0.7	0.7	0.7	0.7	0.7	0.8	0.8	0.8	0.8	0.8	
1/8	0.6	0.7	0.8	1.0	1.1	1.2	1.3	1.4	1.4	1.4	1.5	1.5	1.6	
¼	0.9	1.1	1.4	1.7	1.9	2.0	2.2	2.3	2.4	2.5	2.6	2.8	3.0	
3/8	1.2	1.4	1.8	2.2	2.5	2.7	2.9	3.0	3.3	3.5	3.6	3.8	4.2	
½	1.4	1.8	2.2	2.7	3.1	3.4	3.6	3.8	4.1	4.3	4.5	4.8	5.3	
5/8	1.6	2.0	2.6	3.2	3.6	3.9	4.2	4.4	4.8	5.1	5.3	5.7	6.3	
¾	1.8	2.3	2.9	3/6	4.1	4.5	4.8	5.0	5.5	5.8	6.1	6.6	7.2	
1	2.2	2.8	3.5	4.4	5.0	5.4	5.8	6.2	6.7	7.1	7.5	8.1	9.0	
1 ¼	2.5	3.2	4.1	5.1	5.8	6.3	6.8	7.2	7.8	8.4	8.8	9.6	11	
1 ½	2.9	3.6	4.6	5.8	6.6	7.2	7.7	8.2	8.9	9.5	10	11	12	
2	3.4	4.4	5.6	7.0	8.0	8.8	9.4	9.9	11	12	12	13	15	
3	4.5	5.7	7.3	9.2	10	12	12	13	14	15	16	18	20	
4	5.3	6.9	8.8	11	13	14	15	16	17	19	20	22	25	

Table 1: this chart from the USA (so it's in inches!) shows the distance from the magnet where you'd expect to find a 5 gauss field strength. (*Courtesy K&J Magnetics, Pennsylvania, USA*).

Table 1 shows a chart of standard neodymium magnets from K&J Magnetics, Inc of Pennsylvania. This shows the distance from variously sized neodymium magnets at which the field strength can be expected to be around five gauss, or 500 microTeslas.

The inverse cube law (intensity = 1 ÷ distance^3) can then be used to figure out the field strength at greater distances from the magnet.

For example, according to the chart, a neodymium magnet of 3/8-inch diameter and 1/8-inch thickness registers 5 gauss (500µT) at a distance of 1.1 inches (28mm). Our Magnetometer can detect a similar magnet moving at a distance of 2.7 metres.

This is 96 times (2700mm ÷ 28mm) the specified distance for 5 gauss. So we can calculate the field strength as 500µT÷96^3 = 555pT.

However, we also have to compensate for the fact that the actual dimensions of the magnet are 9mm diameter and 2.5mm thickness (apparently, this is a metric magnet). That gives about 70% of the volume of the specified magnet.

So we can determine that the approximate sensitivity of this Magnetometer is around 380pT (555 x 70%). And that is in a magnetically 'noisy' environment.

What it's useful for

This Magnetometer works best as a magnetic *field* detector. It is less suited for measuring or quantifying magnetic fields. In fact, it totally excludes all stationary magnetic fields. It is designed for maximum sensitivity.

Note that environmental conditions have a major influence on the magnetometer, so that it may work very much better, or very much worse than a typical metal detector.

It also has applications:

- **As a metal detector:** Any nearby **ferrous** objects will distort the magnetic field in their vicinity. Move the Magnetometer through that field and it will pick up the variation and alert you to their proximity.
- **As a magnet sensor:** It reacts to small neodymium magnets at two to three metres' distance, and large magnets much further. It reacts to many magnetised objects as well; for instance, it will pick up a moving magnetised pin about 20-30cm away.
- **As a vehicle detector:** It will pick up a standard car alternator at several metres' distance and it will pick up some trucks a block away (eg, in my home city, municipal trucks).
- **As a pet flap sensor:** Attach a neodymium magnet to the animal's collar and the Magnetometer could be used to open the flap automatically as the animal approaches. Foreign animals will not be able to enter or exit through the flap.
- **As a tsunami alarm:** If mounted close to the water's edge, it will pick up the magnetic field of the ocean (see below). The ocean will recede just before a tsunami, so if you connect the output to a timer which will trigger an alarm in the

The prototype Magnetometer, mounted inside a concrete pipe. While keeping the circuitry very rigid, we are not recommending you copy our method!

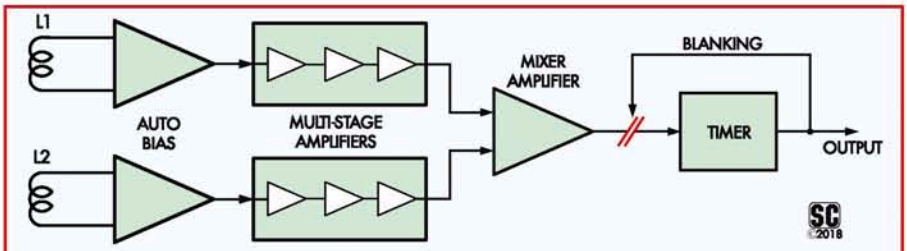

Fig.1: block diagram of the Highly Sensitive Magnetometer. The voltages developed across coils L1 and L2 are amplified greatly and then fed into a differential amplifier which triggers a timer if the difference in voltages exceeds a certain threshold. The blanking is provided to prevent the magnetic field from the relay from re-triggering itself endlessly.

case of the magnetic field not being detected for several seconds, it will give you some warning before the huge wave hits.

- **As an anti-thief alarm**: It will easily detect someone picking up magnetised keys (or a phone or camera) through a tabletop.
- **As a security alarm:** If a magnet is suitably mounted on a door, window or gate, the magnetometer will detect the magnet moving when these are opened or closed. Since the magnet needs no careful mounting, this is very easy to set up.
- **As a game:** Mount a neodymium magnet inside a ball and it will detect whether the ball approaches a target, say, or falls in a hole. Since it reacts to the rate of change of magnetic fields, it could react to the velocity of a ball.
- **As a vibration sensor:** If a magnet is suspended just above one of the magnetometer's coils by a string from the ceiling, or on the end of a long ruler, the magnetometer will detect heavy vehicles at great distances. For example, a freight train at a few kilometres' distance.
- **As a strobe light:** If one omits the power section of the circuit (see below) and places one coil near a speaker, blue LED3 acts as a strobe light. Since the magnetometer filters out frequencies above about 20Hz, the pulses follow the beat.

Use as a metal detector

To be used as a metal detector, the Dual Channel Magnetometer needs some slight modifications. In theory, one would simply move coils L1 and L2 over earth or sand and while the magnetometer is moving in relation to magnetised objects, it would detect them.

But the Magnetometer is far too sensitive for searching soil or sand. The Earth is littered with things which are just slightly magnetised, but sufficiently magnetised to confound all search efforts at any setting—and perhaps surprisingly, the beach is dominated by moving magnetic fields in the ocean.

The solution to both problems is to reduce the sensitivity as required.

When we first tested the magnetometer on the beach, it was utterly overwhelmed by moving magnetic fields of unknown origin. By inserting 470kΩ resistors between the primary and secondary windings of each sense transformer the magnetometer was brought back within range. This will not be the ideal value for all transformers but will give you an idea.

With this simple modification, it was possible to identify the ocean as the problem: the sensitivity needed to be turned up or down, depending on how far the unit was from the shore.

We then desired to find out how strong the ocean's magnetic fields were. Again using the standard neodymium magnet for comparison, we measured 47.9nT two metres from the water's edge and 40.6nT at 12 metres.

This clearly swamps smaller magnetic fields under the sand. For example, at 12 metres from the water's edge, a magnetised hairpin could be found at only 38mm distance, not 800mm as would otherwise be possible. Search sensitivity is therefore reduced by 95%. Things would be better, however, on a very wide beach, far from the water's edge.

So what is the origin of these oceanic fields?

In 2003, *"New Scientist"* reported that induced magnetic fields had been found in the ocean, from space. Then, on 11 April 2018, the European Space Administration revealed that changing magnetic fields in the ocean measured 2.0-2.5nT at satellite altitude and provided a video of their activity on a planetary scale (see Fig.2).

This article may represent the first publication of provisional results on the ground and suggests that various further experiments may be worthwhile.

Basic design

Fig.1 shows the block diagram for the Magnetometer, which reveals its basic design. The detector coils, which produce virtually no current when at rest, are wired to two self-adjusting amplifiers. The output of each amplifier is fed through a pair of six gain stages. The amplified signals are then fed to a mixer amplifier.

Finally, a timer IC with a blanking circuit (which momentarily blanks out instability) switches a reed relay when the output of the mixer amplifier exceeds a certain threshold.

To save time and effort, for coils L1 and L2 we are actually using the primary and secondary windings of open-frame mains transformers (ie, EI-core

The Magnetometer had no problem detecting these three iron nails inside a length of driftwood even from quite a distance away AND hidden in a whole lot of flotsam.

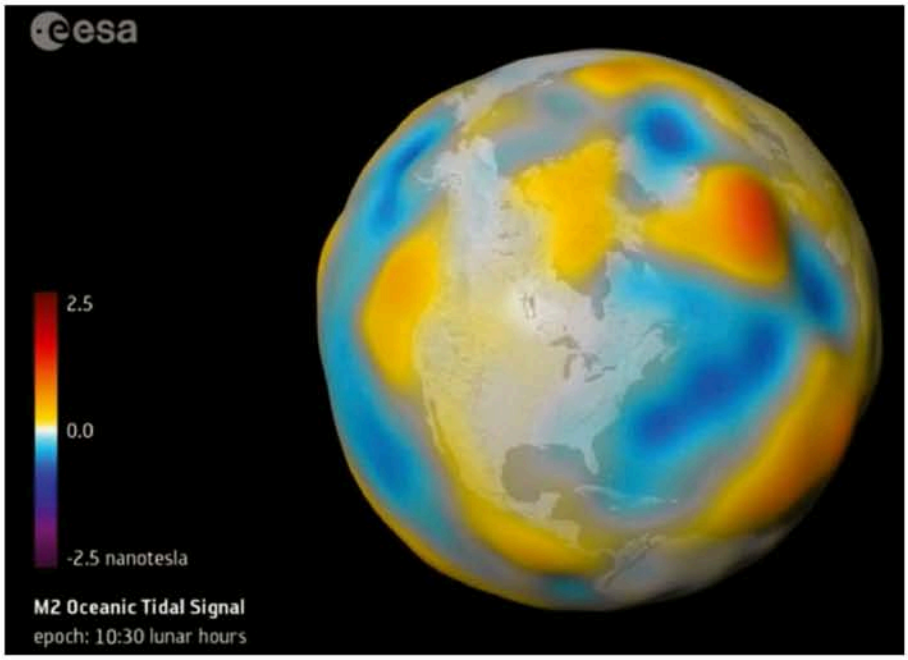

Fig.2: satellite-based measurements showing the magnitude and polarity of the magnetic fields generated by the Earth's oceans on one particular occasion. These fields are small but this Magnetometer can easily pick them up when you are near the ocean; you need to reduce the device's sensitivity when looking for metal objects on the beach because of this!

or the less common C-core type). We wouldn't want to use toroidal transformers since these are designed to have a minimal external magnetic field.

Note that by using transformers as search coils, the search area is small. These coils may react to iron and steel, zinc, nickel, and various alloys and minerals, depending on whether these are magnetised or not. They will not react to other metals such as gold, silver, and copper.

The transformers are mounted around one metre apart, with the circuit board, battery and controls in between. As this assembly is quite large, it can be fitted with a carry strap or handle. A small hand-held controller is connected via a length of cable, with a sensitivity adjustment knob and one blue LED which varies in brightness to indicate the detected magnetic field strength.

The idea is that you can carry the main unit in one hand (perhaps aided with a strap over the shoulder) and this small external control unit in the other hand, which you can hold in a visible location, to observe the brightness of the blue LED.

Circuit description

The circuit is shown in Fig.3. A changing magnetic field near the windings within T1 or T2 will produce a voltage across those coils.

These coils are the primary and secondary winding pairs of unshielded 10A mains transformers (230VAC to 12VAC/10A). The primary and secondary windings are connected in series and in phase to increase the sensitivity.

You may wonder how a transformer can sense external magnetic fields since, in theory, its magnetic field is limited to being within or around its core.

In fact, C-core and EI-core transformers have significant leakage flux, which means they radiate moderate magnetic fields when powered but they will also pick up external magnetic fields.

As we mentioned earlier, toroidal transformers have much less leakage flux due to their construction so would be a poor choice in this role.

Conversely, a high-value crossover inductor might be an even better choice than a conventional transformer as they do not have a contained magnetic field at all. A crossover inductor with an iron core might make for the most sensitive choice.

Regardless, the voltage from T2's windings is applied directly between the inputs of IC3, an LM380N audio amplifier chip, while the voltage from T1's windings first passes through switches S2 and S3 before being applied to the inputs of IC1, another LM380N.

S2 allows T1 to be disconnected while S3 allows its connections to be reversed. As a result, the unit can be used in three modes. The first is single-ended mode, with T1 out of circuit. This allows for detection of the Earth's magnetic field, where T2 is turned on its own axis.

In the second mode, T1 and T2 are both connected to IC1/IC3 and with the same phase, which provides magnetic noise cancellation. In the third mode, T1 and T2 are connected to IC1/IC3 out of phase, which gives maximum sensitivity but less stability and no magnetic noise cancellation.

The LM380N audio amplifiers have a fixed gain of 50 times and the output automatically settles to half the supply voltage without the need for separate bias resistors at the inputs.

The output of the LM380N ICs, from pin 8, is then AC-coupled to a series of further amplification stages via 1uF electrolytic capacitors. These amplifiers have been carefully designed so that they are stable, despite the high total gain provided by all the amplifiers connected in series. For a start, 1N4148 diodes are used to isolate the supply rails of each amplifier IC, so that ripple from one does not feed into another. Also, each pair of IC supply pins is fitted with multiple bypass capacitors, including some very high-value electrolytics. These components are vital. Output currents are kept very low, also to reduce ripple.

Using inverters as amplifiers

IC2a-f and IC4a-f are the stages within two unbuffered hex inverters (4069UB). Each stage just consists of two Mosfets, one P-channel and one N-channel, arranged in a totem pole arrangement, as shown in Fig.4. The gate and source terminals are connected together while the drains connect to the supply rails.

The result is that if the input voltage A is high, the upper P-channel Mosfet is switched off and the lower N-channel Mosfet is switched on, pulling the output (Y) down. And if input voltage A is low, the P-channel Mosfet is on and the N-channel Mosfet is off, pulling the output up.

The term "unbuffered" refers to the fact that this is a single stage; a conventional inverter would consist of three such circuits in series, to give a

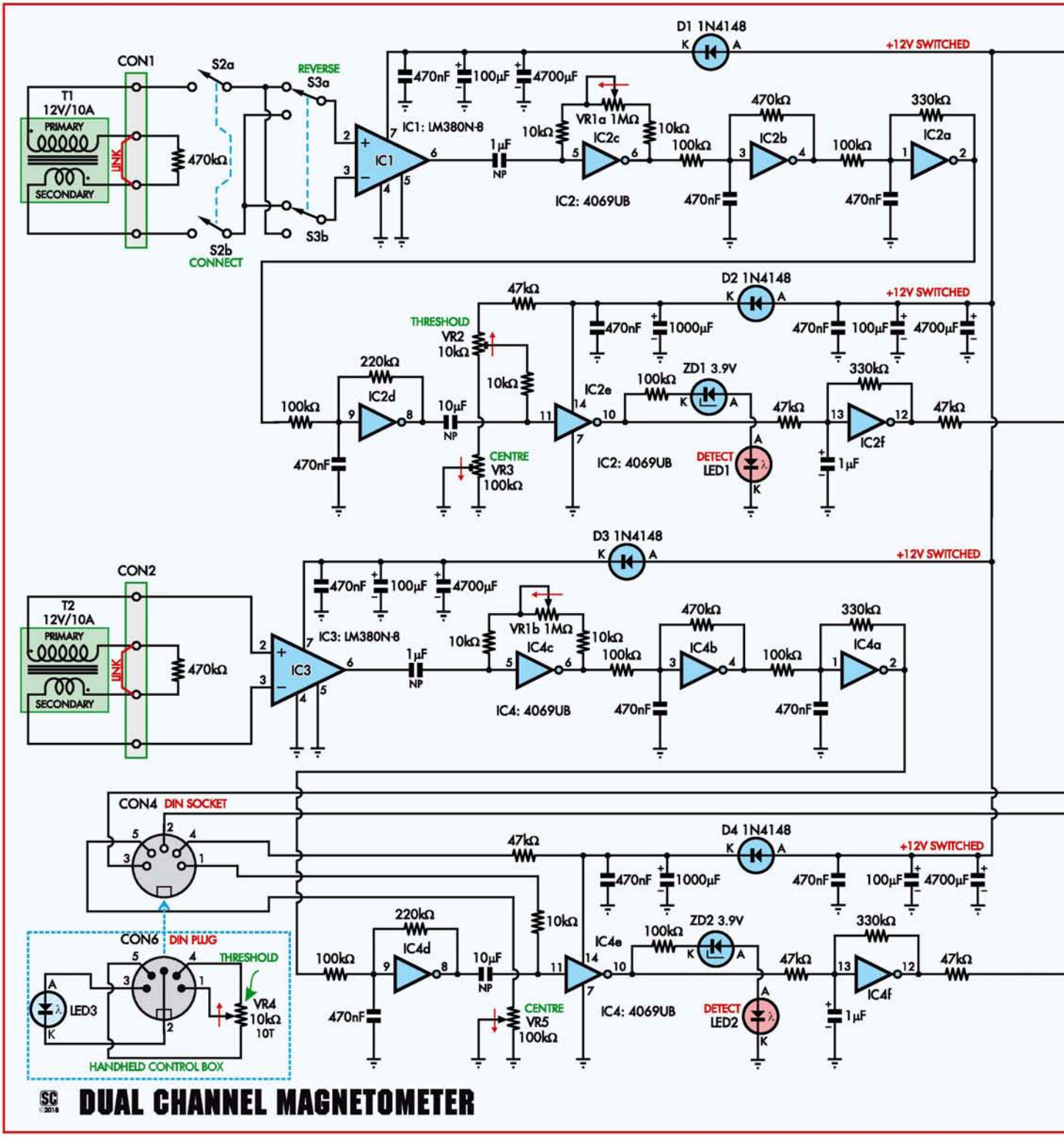

DUAL CHANNEL MAGNETOMETER

much higher gain, which is beneficial when the gate is being used in a digital circuit. But the unbuffered type is far more suitable for use in a linear manner, as it is used here.

With an input voltage somewhere between the supply rails, the two Mosfets will both be in partial conduction and passing roughly the same current, so the output voltage will also be between the supply rails. Therefore, by applying negative feedback from the output to the input via a resistive divider, we can use these unbuffered inverters as crude amplifiers with relatively high gain.

The transfer characteristic of each stage is shown in Fig.4 (from the device data sheet). As you can see, the response is non-linear but the gain is quite high when the input voltage is very close to half supply. Using the inverter in closed loop mode will mean that in the quiescent condition, the open loop gain is at maximum and the response will be slightly more linear.

The first inverter-based gain stage, built around IC2c/IC4c, has adjustable gain via dual gang potentiometer VR1, which changes the feedback re-

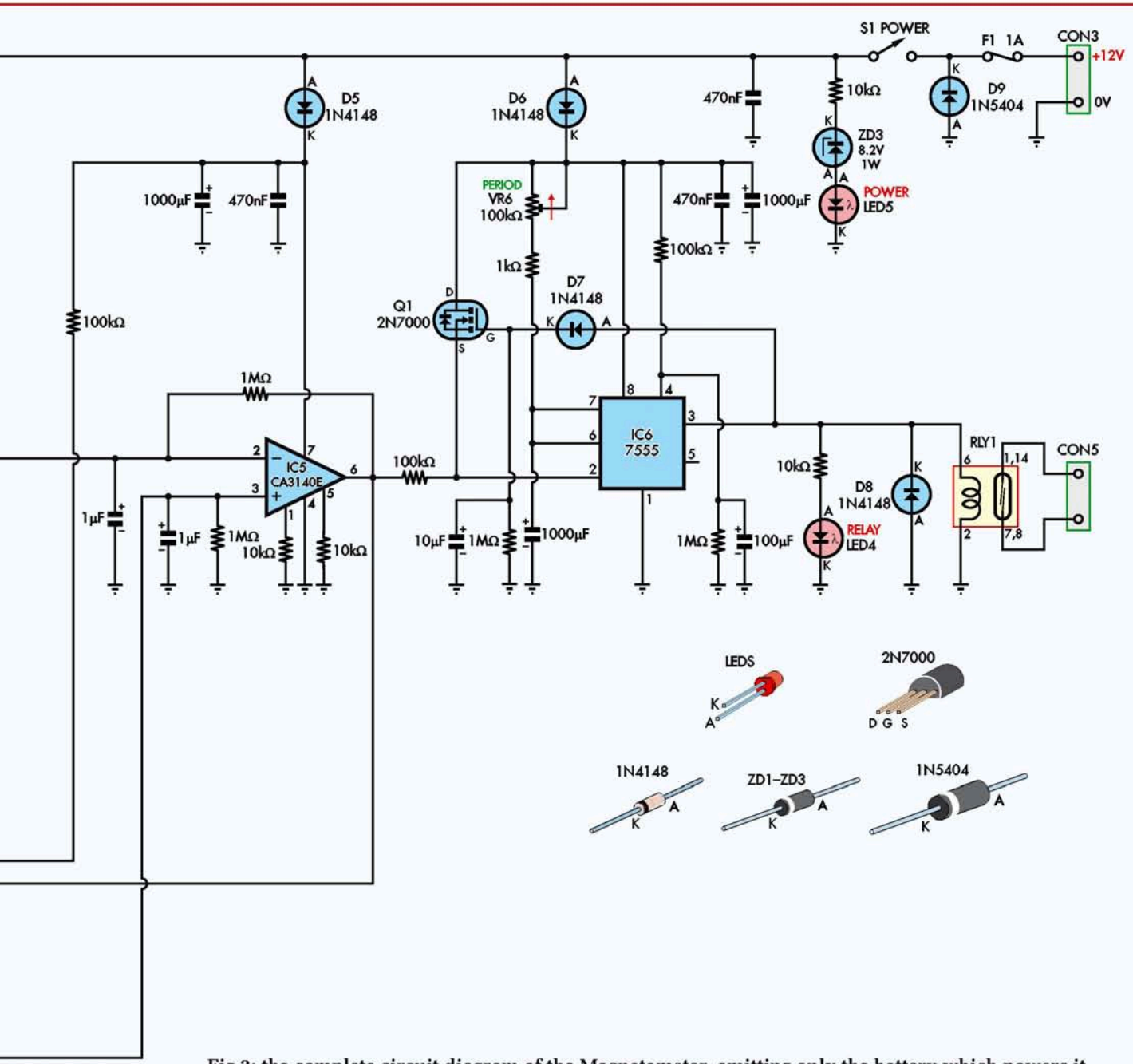

Fig.3: the complete circuit diagram of the Magnetometer, omitting only the battery which powers it (connected via CON3). Threshold adjustment potentiometer VR4 and magnetic field indicator LED3, both shown at lower left, are mounted offboard, in a small handheld unit. The two similar sensor/amplifier channels are shown above these, while the differential amplifier and timer are to the right. CON6 is on the handheld control box, connecting to its mating socket on the unit. Also note the wiring of T1 and T2 – their starts are indicated by the black dot.

sistance. The other part of the divider is actually formed by the impedance of the 1µF coupling capacitor along with the output impedance of amplifier IC1/IC3.

Therefore, this first stage has very high gain with VR1 fully clockwise, with the gain somewhat frequency-dependent due to the reactance of the coupling capacitor. The next three stages have lower, fixed gains of 4.7 times, 3.3 times and 2.2 times respectively. They also incorporate low-pass RC filters with a -3dB point of around 3.3Hz each, giving an overall -3dB point of about 1.6Hz.

The signals are then AC-coupled by 10uF electrolytic capacitors and subject to adjustable DC bias, set using trimpots VR2-VR5. The following gain stages, IC2e and IC4e, are operated in open-loop mode. The adjustable DC bias allows the gain and quiescent output voltage of these stages to be tweaked.

The resulting signal then passes through another low-pass RC filter (47kΩ/1µF), again with a -3dB point of around 3.3Hz. The output voltage of IC2e/IC4e is also fed to a

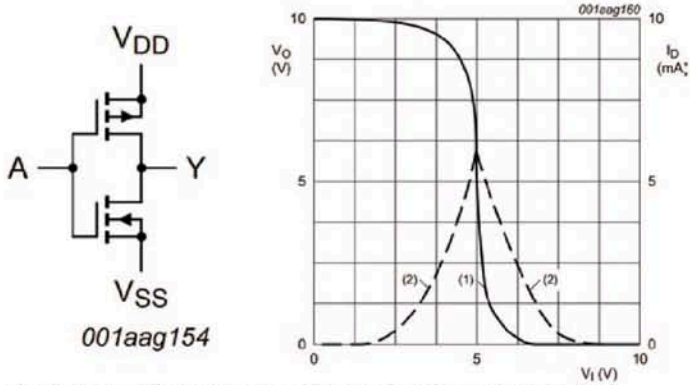

Fig.4: internal structure and transfer characteristics of each of the six the unbuffered hex inverters inside a single HEF4096UB IC. They consist of a pair of Mosfets which can be used either as a digital inverter or as a high-gain inverting amplifier, although the transfer characteristic is non-linear. Reproduced from the NXP data sheet.

100kΩ resistor, with a 3.9V zener diode and red LED in series. This LED will therefore light if the output voltage in that half of the circuit is above around 6V (ie, above half supply).

The signal then passes through another gain stage (number seven, if you're counting), built around IC2f/IC4f, with a fixed gain of seven times, before being fed to the inverting and non-inverting inputs of op amp IC5 via another pair of RC low-pass filters, with the same 3.3Hz -3dB point.

The overall filtering thus far has the effect of severely attenuating or even cutting out signals above about 1Hz. This virtually eliminates false triggering from 50Hz or 60Hz magnetic fields induced by mains currents, which are pervasive in urban areas. IC5 is configured as a differential amplifier with a gain of 21 times.

This means that if the two input signals swing in the same direction simultaneously, the output of IC5 will not change. But if they swing in opposite directions, or if one stays constant and the other changes, a signal will appear at its output, with the difference in voltages amplified by the gain factor of 21 times.

It's hard to calculate the exact amount of gain applied to the signals from T1 and T2, partly because it varies depending on the potentiometer settings and frequency, and partly because we don't know the exact gain of the stages operating in open loop mode.

But if we assume that the open loop gain of the inverters is around 20 times and that the gain of IC2a/IC4a is set to around 10 times, the overall gain applied to the signals from T1/T2 is in the order of 25 million times (50 x 10 x 4.7 x 3.3 x 2.2 x 10 x 7 x 21).

No wonder this instrument is capable of such sensitivity!

Note that there are several different compatible chips for IC2 and IC4 but you should stick to the specified HC-F4069UBE type since these provide the most gain.

Triggering the timer

When a sufficiently large magnetic signal is detected, resulting in a swing of several volts at the output of differential amplifier IC5, that pulse then triggers timer IC6. Its job is to stretch that (possibly very short) pulse into something longer that you will notice, as it lights up LED3, and also to drive the coil of RLY1, to trigger any external circuitry which may be connected via CON5.

CMOS timer IC6 is triggered when its pin 2 trigger input is pulled below 1/3 VCC, which in this case, equates to a threshold of around 3.7V. Note that this means that the timer will only be triggered if the output of IC5 swings low.

But if the output of IC5 swings high due to a magnetic field of the opposite polarity, it will almost certainly swing positive and negative a few times before settling down, so timer IC6 will be triggered regardless of the initial polarity of the pulse.

Before pin 2 goes low, the 1000µF capacitor connected between pins 6/7 and ground is charged up close to +12V, via trimpot VR6 and its 1kΩ series resistor. Once the IC is triggered, pin 6 (discharge) immediately goes low, discharging that capacitor.

At the same time, the pin 3 output goes high, energising the coil of RLY1 and closing its contacts.

Since VR6 changes the time that it takes for the 1000µF capacitor to recharge once the discharge pin is no longer being actively driven, it controls the on-time for both RLY1 and LED4. The minimum time will be around one second while the maximum time is around 90 seconds.

The two resistors and capacitor connected to its reset pin

Slightly undersize photo of the PCB shown at right (actual board is 224mm wide). Use this in conjunction with the component overlay (Fig.5) when assembling the PCB.

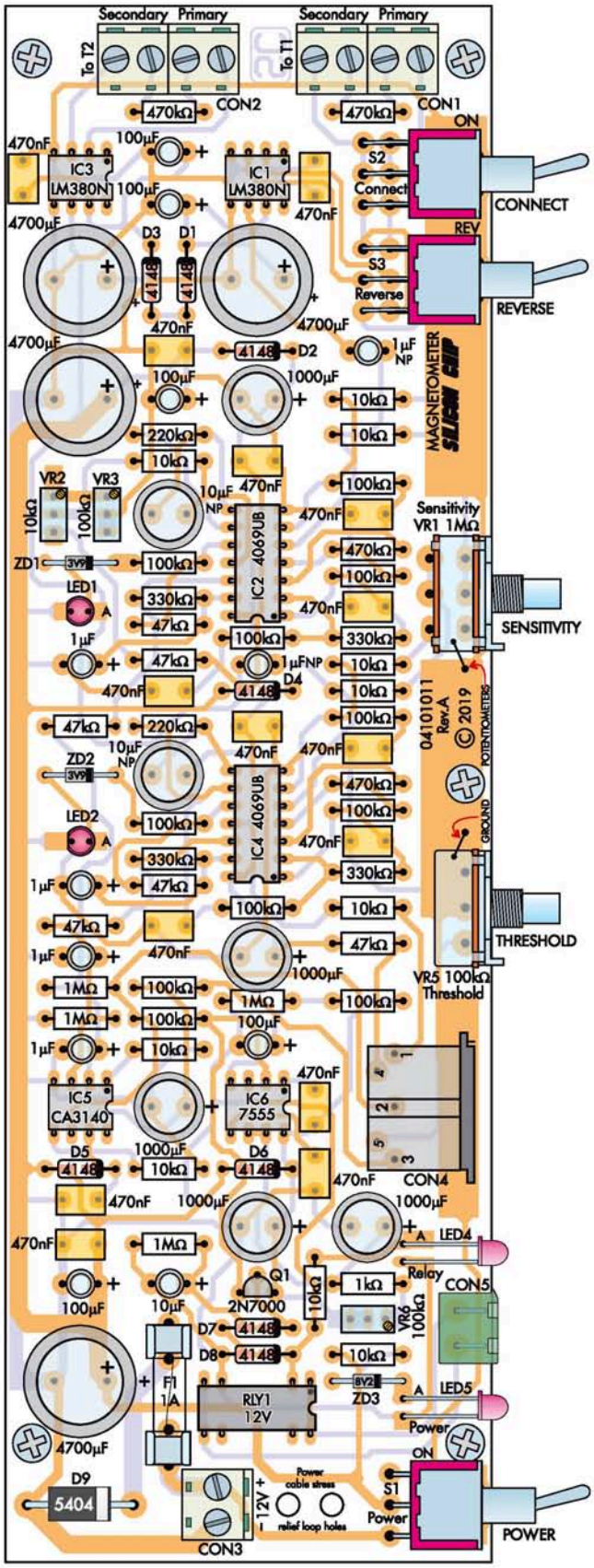

Fig.5: the Magnetometer PCB overlay diagram, showing where to mount each component on the board. All controls and most LEDs are along one edge so that they can protrude through holes in the enclosure, including DIN socket CON4, which connects to the handheld controls via a shielded cable.

(pin 4) prevent the output from switching on when power is first applied, allowing the Magnetometer time to settle before IC6 becomes active, avoiding false triggering of RLY1.

Once the timer is triggered, since output pin 3 goes high, the gate of Mosfet Q1 is charged up close to VCC. This causes Q1's drain-source channel to conduct, pulling up the trigger input (pin 3), regardless of the state of the output pin of op amp IC5.

The 100kΩ series resistor from that output pin prevents the op amp from "fighting" this condition. This means that IC6 cannot be re-triggered for some time. The 10µF capacitor and 1MΩ resistor from the gate of Q1 to ground sets this blanking time to around ten seconds.

This is important since the magnetic field around RLY1's coil will be picked up by the Magnetometer as soon as it is triggered and without the blanking, RLY1 would continuously be switching on and off as the unit re-triggers itself via magnetic feedback.

Variations

For use as a metal detector, you may wish to omit or remove all components following IC5 in the circuit. LED3 will still light to indicate changing magnetic fields.

LED3 may also be directly replaced with a 1mA meter, bearing in mind that the magnet inside the meter should not come close to a sensor coil.

If the relay is not omitted, the blanking circuit will be disruptive when searching.

Construction

We have designed a PCB for this project, which is coded

5 good reasons to use Switchmode – the repair specialists to industry and defence

one
Specialised service
Benefit from our purpose-built facilities, efficient and effect service. Since 1984 we have specialised solely in the repair and calibration of all types of power supplies and battery chargers up to 50kVA

two
Turn around time
We provide three levels of service:
standard (10 days), standard plus (4 days), emergency (24 hours)

three
Access to Technicians and Engineers
Talk directly to our highy skilled Technicians and Engineers for immediate technical and personal assistance.

four
Quality Assurance
Accredited to ISO 9001 with SAI Global and ISO 17025 with NATA.
Documented, externally audited management systems deliver a repeatable, reliable service

five
Convenience and certainty
We provide fixed price quoes after assessment of goods and cost-effective maintenance, tailored to meet your individual needs
Take advantage of our resources.

SWITCH MODE
REPAIR SPECIALISTS TO INDUSTRY AND DEFENCE
NATA ACCREDITED FOR TECHNICAL COMPETENCE
Quality ISO 9001 SAI GLOBAL
Switchmode Power Supplies Pty Ltd
Unit 1/37 Leighton Place, Hornsby NSW 2077 Australia
Tel 61 2 9476 0300
Email: service@switchmode.com.au Website: www.switchmode.com.au

Parts list – Extremely Sensitive Magnetometer

1 double-sided PCB, code 04101011; 70 x 224mm
1 12V coil SPST DIL reed relay (RLY1) [Altronics S4101A, Jaycar SY-4032]
1 SPDT right-angle PCB-mount toggle switch (S1) [Altronics S1325]
2 DPDT right-angle PCB-mount toggle switches (S2,S3) [Altronics S1360]
5 2-way PCB-mount terminal blocks, 5.08mm pin spacing (CON1-CON3)
1 right-angle PCB-mount 5-pin DIN socket (CON4) [Altronics P1188]
1 5-pin DIN line plug to suit CON4 [Altronics P1151]
1 horizontal 2-way pluggable terminal block (CON5) [Jaycar HM-3102]
1 2-way pluggable screw terminal for CON5 [Jaycar HM-3122]
2 M205 PCB-mount fuse clips (F1)
1 1A M205 fast blow fuse (F1)
1 100mm length of 0.7mm diameter tinned copper wire
4 M3 x 6.3mm tapped Nylon spacers
4 M3 x 25mm machine screws
4 M3 hex nuts
3 knobs to suit VR1, VR4 & VR5

Semiconductors
2 LM380N-8 2.5W audio power amplifiers (IC1,IC3)
2 HCF4069UBE unbuffered hex inverters (IC2,IC4)
1 CA3140E BiMOS op amp (IC5)
1 TLC555CN CMOS timer (IC6)
1 2N7000 small signal N-channel Mosfet (Q1)
4 ultra-bright 3mm red LEDs (LED1,LED2,LED4,LED5)
1 ultra-bright 5mm blue LED (LED3)
2 3.9V 1W zener diodes (ZD1,ZD2)
1 8.2V 1W zener diode (ZD3)
8 1N4148 signal diodes (D1-D8)
1 1N5404 3A diode (D9)

Capacitors
4 4700µF 16V radial electrolytic
5 1000µF 16V radial electrolytic
5 100µF 16V radial electrolytic
1 10µF 16V radial electrolytic
2 10µF 16V non-polarised/bipolar (NP/BP) radial electrolytic
4 1µF 16V radial electrolytic
2 1µF 16V non-polarised/bipolar (NP/BP) radial electrolytic
15 470nF multi-layer ceramic or MKT *(code 470n or 474)*

Resistors (all 0.25W, 1%)
4 1MΩ 4 470kΩ 4 330kΩ 2 220kΩ 11 100kΩ
6 47kΩ 10 10kΩ 1 1kΩ
1 1MΩ 16mm dual gang linear potentiometer (VR1)
1 10kΩ multi-turn vertical trimpot (3296W style) (VR2)
2 100kΩ multi-turn vertical trimpots (3296W style)(VR3,VR6)
1 10kΩ multi-turn wirewound potentiometer (VR4)
1 100kΩ 16mm linear potentiometer (VR5)

Miscellaneous
1 timber enclosure (9mm MDF box, 70x70mm inner dimensions)
1 2m length of four-core shielded microphone cable
1 2m length of single-core shielded microphone cable
1 1m length medium-duty figure-8 wire
2 unshielded transformers with 12V, 10A secondaries (T1,T2)
1 small enclosure for LED3 and VR4
1 12V battery (small SLA or eight D cells with battery holder)
various lengths and colours of hookup wire
heatshrink tubing
Epoxy glue

04101011 and measures 70 x 224mm.

Use the PCB overlay diagram, Fig.5, and matching photo as a guide during assembly. Start by fitting the resistors where shown on the overlay diagram. Even though we show their colour codes in a table, it's a good idea to double-check their resistance with a DMM before installing them, since the coloured bands can often be hard to read accurately.

Follow with the diodes. There are two types, eight signal diodes (D1-D8), one larger power diode (D9) and three zener diodes (ZD1-ZD3) of two different types, so don't get them mixed up. Each one must be orientated with the cathode stripe as shown in Fig.5.

The six ICs should be installed next. You can either solder them directly to the board or solder sockets to the board, then plug the ICs in later. Sockets make it easier to replace a damaged IC but they also are prone to long-term failure due to oxidisation, so we prefer to avoid them.

The ICs are also polarised, so ensure that each pin 1 dot is positioned as shown on the overlay diagram. Be especially careful with IC2 and IC4 since they are extremely sensitive to static discharges.

That is why there are 10kΩ resistors at pins 5 and 6 of IC2c/IC4c and at pin 11 of IC2e/IC4e. These points connect to potentiometers which you touch during operation, and any static discharge which jumps to those pots could destroy the ICs without the series resistors for protection.

Now is also a good time to solder

We used 8x Alkaline cells for power but bear in mind that with a 100-150mA drain they won't last long! Ten rechargeable NiMH or NiCd cells might be a better bet . . . or even a 12V SLA or LiPo battery. With 20:20 hindsight, though, we'd think seriously about a 4 x 18650 rechargeable Li-ion cell pack (14.8V).

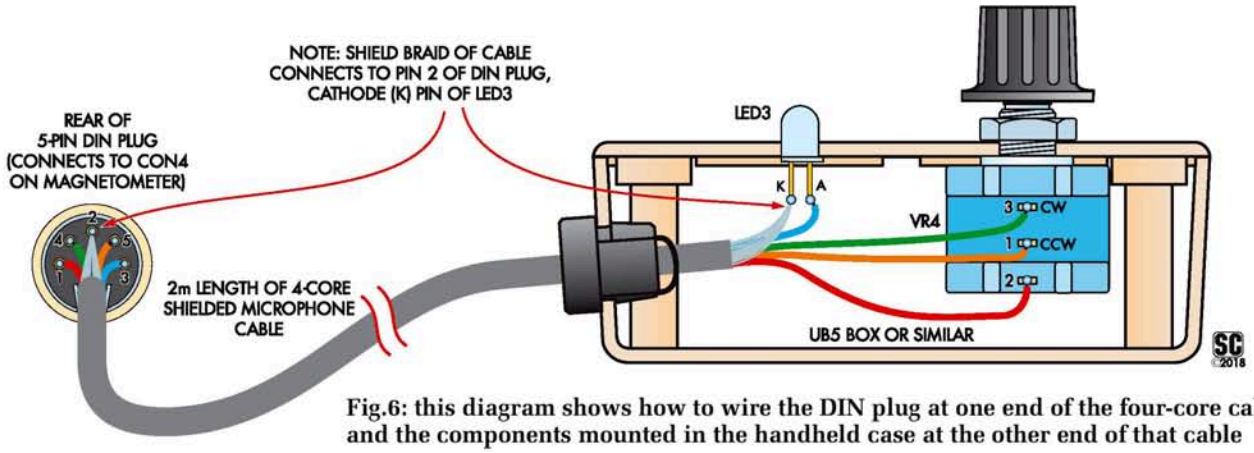

Fig.6: this diagram shows how to wire the DIN plug at one end of the four-core cable, and the components mounted in the handheld case at the other end of that cable

the reed relay, RLY1. It's in an IC-type package and again, it is polarised. Make sure its pin 1 is orientated as shown in Fig.5.

Next, fit the MKT or ceramic capacitors (whichever you have chosen to use). These are not polarised, so you don't need to worry about the orientation. Follow with Mosfet Q1 and trimpots VR2, VR3 and VR6. Make sure the trimpots are fitted with the adjustment screw in the locations shown on Fig.5.

Solder LED1 and LED2 in place, pushed down fully onto the PCB, with the longer anode leads through the holes marked "A" on the board.

Follow with the electrolytic capacitors, starting with the smallest and working your way up to the tallest. These must all be orientated correctly, with the longer positive leads soldered to the side marked "+". The stripe on the can indicates the negative side. Don't get the different values mixed up; the PCB overlay diagram shows where each one goes.

Now dovetail two pairs of 2-way terminal blocks together to form two 4-way terminal blocks and fit these to the top of the board, with the wire entry holes facing towards the edge of the board. Check they are pushed entirely down before soldering them in place.

Also fit the fifth 2-way terminal block at the bottom of the board, with its wire entry holes facing towards the two large holes in the PCB.

Having done that, you can also fit the socket for the pluggable terminal block (CON5) where shown in Fig.5. Then solder the fuse holder clips for F1, ensuring that the fuse retaining tabs go towards the outside and that the clips are pushed down flat onto the PCB before soldering.

Simple | Economical | Great Performance

Shockline™ 1-Port Vector Network Analyzer

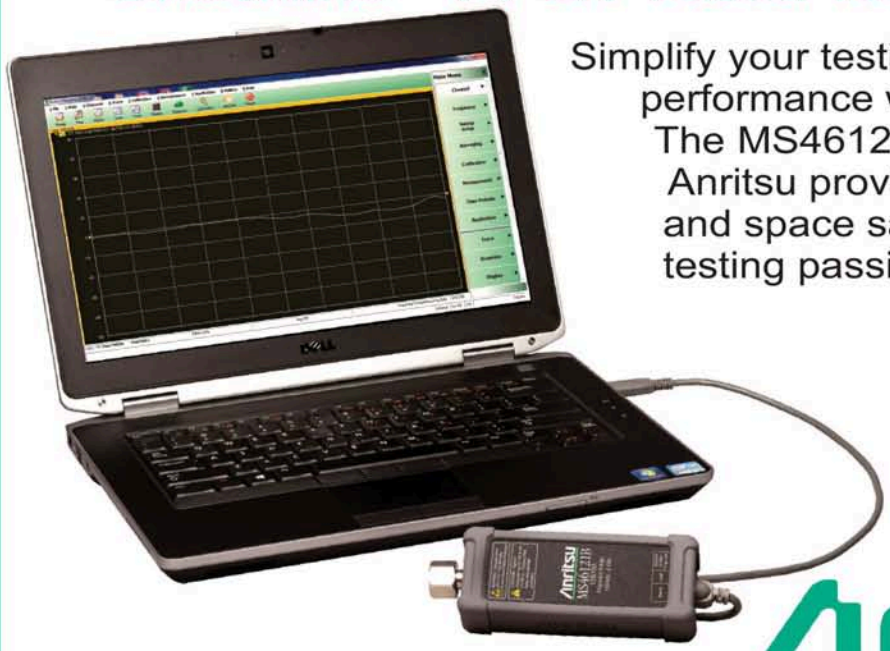

Simplify your testing while capitalizing on performance with a 1-Port USB VNA. The MS46121B Shockline VNA from Anritsu provides price, performance and space saving advantages when testing passive devices up to 6GHz.

NOW AVAILABLE
from $3,995 + GST#
(laptop not included)

 # Exclusive special price for SILICON CHIP readers. Valid to Feb 28, 2019

Web: www.anritsu.com/en-AU/
Email: AU-sales@anritsu.com

Anritsu
envision : ensure

Next, fit PCB-mounting switches S1-S3, again pushing them down as far as they will go before soldering the leads. Now bend the leads of LED4 and LED5 by 90° 8mm from the base of the lens, ensuring that the longer anode lead ("A") is orientated as shown in Fig.5, then solder them to the PCB with the lens at the same height above the board to the actuators for switches S1-S3.

Before fitting potentiometers VR1 and VR5 to the board, scrape off some of the passivation layer from the top of the pot bodies using a file. Be careful to avoid breathing in the resulting dust.

Solder the two potentiometers in place, then cut 50mm lengths of tinned copper wire and solder one end into the ground hole next to the pots, then bend the wires over and solder them to the exposed metal on the pot body.

Finally, solder the DIN socket (CON4) where shown in Fig.5 and the PCB assembly is complete.

Testing and calibration

It's tough to make adjustments once the unit has been fully assembled, so it's best to check that it's working and make the required adjustments first.

But you will need to be very careful where you do this and how you lay the parts out since stray magnetic fields will make calibration impossible, as will any movement in the components during the set-up procedure.

We recommend that you place the two coils one metre apart on a sturdy timber desk – keep them away from metal in case it is magnetised. Place the remaining circuitry nearby and wire it up but make sure that nothing will move while you are making adjustments.

It's a good idea to screw the PCB onto a heavy piece of timber at this stage, so it won't move as you work on it.

Use clip leads to short out the two 470kΩ resistors next to CON1 and CON2 initially, to give maximum sensitivity. Alternatively, you can use a component lead off-cut to short out the middle two terminals of CON1 and CON2, to achieve the same result.

Switch S2 on (down) so that T1 is in-circuit and switch S3 off (up) so that it is in phase with T2. You can ensure this by orientating the two coils/transformers identically and making sure that the same end of each winding goes to pin 2 of IC1 and IC3.

Set gain adjustment potentiometer VR1 and trimpots VR2 and VR3 to their minimum. Fit 1A fuse F1, then apply power and adjust the presets for channel 1, first VR3 (coarse adjustment) and then VR2 (fine adjustment), so that red LED1 only just begins to flicker. Move a magnet past T1 and check that LED1 flickers in response.

Now adjust Channel 2 using the same procedure by adjusting VR5 and then VR4, but this time, keep an eye on blue LED3. Turn up VR5 until LED3 just lights up, then turn it back slightly until it goes out.

Use a similar procedure to adjust VR4.

In an urban environment, depending on the time of day, blue LED3 may pulsate regularly, indicating that the unit is overloaded by magnetic flux. In an environment free from magnetic noise, it may never indicate overload. Note that overloading cannot harm the Magnetometer.

In the unlikely event that you cannot adjust the unit to avoid overloading, you need to reduce the gain of both channels. The easiest way to do this is to remove the clip leads from the 470kΩ resistors next to CON1 and CON2 (or remove the short across the middle two terminals, if you used that approach instead).

You can also replace those 470kΩ resistors with different values; higher values reduce the sensitivity while lower values increase it.

As some components in this design may vary between batches, precise values cannot be offered. Try changing these resistor values in increments of around 100kΩ until you find the value which gives maximum sensitivity without overloading.

Preparing the "case"

As shown in the photos, the prototype was built into a length of concrete pipe, with sensor transformers T1 and T2 potted in plastic boxes which were glued onto the ends.

While this worked well, we don't recommend that you use the same assembly technique for several reasons.

Concrete pipes are heavy, relatively difficult to get and may contain asbestos.

Also, you would have to mount most of the controls off-board and wire them up with flying leads; a tedious process. They're also quite hard to cut and drill; you need masonry bits for drilling and a hacksaw with a carborundum rod for cutting the pipe to length.

In short, while it works, we don't recommend it.

The main reason a concrete pipe was used is that the enclosure has to be absolutely rigid as any movement of the transformers will result in false triggering of the unit.

A metal enclosure is not suitable as it would interfere too badly with the small magnetic fields we are trying to detect. And a plastic (PVC) pipe (even a heavy-duty one such as a sewer pipe – would flex too much.

But rather than using a pipe, we suggest that you build a rectangular box from 9mm MDF, around 1m long, with inside dimensions of at least 70x70mm.

If you want to incorporate a sealed

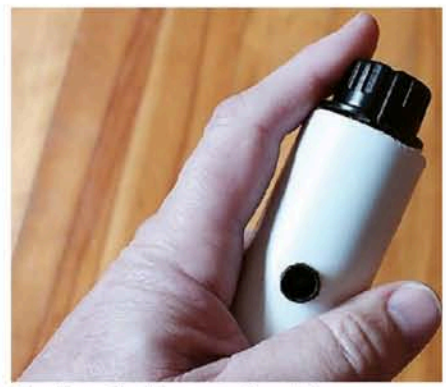

The handheld control unit has a sensitivity adjustment potentionmeter (VR4) and an indicator (LED3). This one is built into a length of PVC pipe.

Resistor Colour Codes

	Qty.	Value	4-Band Code (1%)	5-Band Code (1%)
❑	4	1MΩ	brown black green brown	brown black black yellow brown
❑	4	470kΩ	yellow violet yellow brown	yellow violet black orange brown
❑	4	330kΩ	orange orange yellow brown	orange orange black orange brown
❑	2	220kΩ	red red yellow brown	red red black orange brown
❑	11	100kΩ	brown black yellow brown	brown black black orange brown
❑	6	47kΩ	yellow violet orange brown	yellow violet black red brown
❑	10	10kΩ	brown black orange brown	brown black black red brown
❑	1	1.0kΩ	brown black red brown	brown black black brown brown

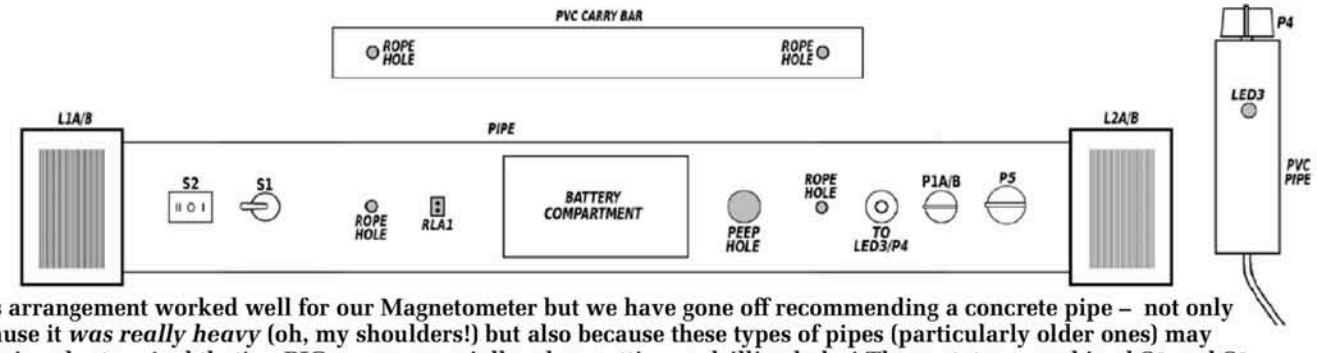

This arrangement worked well for our Magnetometer but we have gone off recommending a concrete pipe – not only because it *was really heavy* (oh, my shoulders!) but also because these types of pipes (particularly older ones) may contain asbestos. And that's a BIG no-no, especially when cutting or drilling holes! The prototype combined S2 and S3 into one DPDT switch (S2) but separate switches may be more convenient (as shown on the circuit diagram).

lead-acid (SLA) battery to power the unit, it may need to be larger than this.

Having cut suitable pieces of MDF, mark out and drill holes in one side for the switch actuators, pot shafts, LEDs, DIN socket and relay contacts (via CON5). We've produced a drilling template which you can download from our website that will help you out. Position this so that when the PCB is attached to the panel, it will hover just above the bottom piece of timber forming the case.

You will then need to attach the PCB to the back of this panel before proceeding, using the potentiometer nuts. If attaching a panel label (a good idea, so you know what control does what), stick it on first and then screw the nuts on top.

Now sit the timber base up against the side panel and mark out the locations for the four 3mm mounting holes, then drill these in the base and attach the PCB using tapped spacers. Our drilling template is designed to locate the front panel holes so that 6.3mm tapped spacers are suitable. We suggest that you feed 25mm long machine screws up through the base, thread the spacers on, then the PCB on top and hold it in place using hex nuts. You can now fit the knobs for VR1 and VR5.

Next, figure out how long the leads going from CON1 and CON2 to T1 and T2 will need to be. One pair will likely be longer than the other since that end of the PCB will be closer to one transformer. Cut appropriate lengths of shielded cable and screw them tightly into CON1 and CON2, with the shield going to one terminal and the inner conductor to another (make a note of which goes to which).

Similarly, figure out how long the battery leads to CON3 need to be, cut the twin core lead to length and screw the conductors into CON5. Feed this cable through the provided relief holes, from the top of the PCB to the underside and then back to the top again.

Note that you should double check all these connections since terminals CON1-CON3 may be difficult to reach once the unit has been fully assembled.

Now would be a good time to attach a carry strap or handle to the top of the enclosure if you want it to be portable.

You can use rope for this purpose but you might prefer a fixed handle, or you could even fit the unit with wheels. During operation, the unit should be kept parallel to the ground. Bear in mind that if you use rope, it will probably stretch a little due to the weight of the finished unit.

You can now join the MDF pieces together using wood glue and plenty of small nails or screws, to keep it nice and rigid.

These will have a slight effect on magnetic fields but there are metallic components on the PCB anyway; as long as everything is held rigidly in place relative to the transformers, they should not cause any false triggering or reduced sensitivity.

Mounting the transformers

While you could build boxes for the transformers from MDF and mount them on the ends of your main enclosure, it's easier to purchase suitably sized plastic cases. You can then glue the transformers into the cases.

It isn't necessary to pot them, as was done for the prototype, but you certainly could if you wanted to.

You need to be careful when gluing the transformers since their windings should be perfectly aligned with one another, not a fraction of a millimetre out of place.

This is easier than it sounds. A flat floor is all that is required, and a means of ensuring that the coils are perfectly parallel to one another (say, lining them up carefully with floorboards).

When mounted, the windings of the transformer should be horizontal, not vertical, like rings stacked on the ground. The lengths of the core's laminations should be perpendicular to the long axis of the enclosure.

The prototype's sensor transformers were potted to eliminate any possibility of moisture ingress with the connections brought out to screw terminals.

"I'd upgrade to the Facett in a heartbeat!"
Ross Tester, Silicon Chip
Blamey Saunders hears
Facett is the first ever Aussie-made modular hearing aid.
• Rechargeable
• User adjustable
• Award winning
Find out if Facett is right for you by taking the hearing test at blameysaunders.com.au.

It may be helpful to keep wires to the transformer windings exposed and accessible, in case you need to change the wiring later.

Attach the transformer primary and secondary wires to the wiring that you ran earlier from CON1 & CON2 and if soldering them, use heat shrink tubing to insulate the joints.

You will also need to connect your battery/battery holder up to the wires you ran earlier, insert it into the enclosure and glue it in place. We suggest you use silicone sealant to do this. Remember that you may have to replace the battery later.

You can then attach the transformer cases to the ends of the main enclosure. We don't suggest you do this using silicone as it could flex, so use a good epoxy instead (eg, JB Weld). While you are waiting for that to cure, you can build the remote control box.

Remote control box

The remote control box contains sensitivity adjustment potentiometer VR4 and detection indicator LED3 and not much else. A small Jiffy box (eg, UB3) makes a suitable enclosure.

As you can see from the photos, these components were housed in a small section of PVC pipe for the prototype; you could do the same.

Make holes to mount VR4 and LED3 and another sized to suit the microphone cable. Attach VR4 using its supplied nut and glue LED3 and the microphone cable in place using clear neutral-cure silicone sealant.

It's then just a matter of wiring up LED3 and VR4 to the cable, as shown in Fig.6. That same figure also shows how the 5-pin DIN plug should be wired to the cable at the other end.

Be sure to secure the strain relief clamp inside the plug housing around the cable's outer insulation, to ensure your solder joints won't fail if there is any tension on the cable.

Once you've wired up both ends, check for the correct continuity from each pin on the DIN plug to the components in your control box using a DMM set on continuity mode, then seal up the enclosure and plug the cable into the socket on the main unit.

You are then ready to test the finished magnetometer and start using it.

Usage tips

It is recommended that you first 'play' a bit with the device to find out how sensitive it is, what it reacts to, and the best settings for controls VR1, VR4 and VR5.

While experimenting, you should have as few metal or magnetic materials as possible near the circuit, since these interfere with its operation.

Experiment, too, with switches S2 and S3, which disconnect T1 or reverse it. A reversed coil pushes the circuit to the limits of sensitivity and is better for long-range measurements, yet there will no longer be compensation for magnetic 'noise'.

Switching one coil out of circuit is useful for experimentation and for detecting the Earth's magnetic field, by rotating the unit on its own axis.

Power supply

Power for the Magnetometer comes from a 12V battery or 12V DC regulated power supply (it must be regulated since any ripple on the supply line would swamp the small signals being amplified).

It draws about 150mA during operation. A good-quality 8-cell alkaline battery pack should last a whole day but note that cheap batteries can fail very quickly with such a high current drain.

If the magnetometer is to be used often, rechargeable cells are a good idea. For example, you could use ten NiMH or NiCd cells (10 x 1.2V = 12V) rather than eight alkaline cells (8 x 1.5V = 12V).

Or you could use a 12V SLA battery – it should handle this load with no problems and larger SLAs will last for several days of use. The downside of an SLA battery would be its weight.

An attractive, and lighter weight, alternative would be a rechargeable pack made from 4 x 18650 Li-ion cells (3.7V each). This would give 14.8V – easily within the circuit's capability.

Holders for 1, 2, 4 or more 18650s are readily available and quite cheap – and they give you the option of having a set of cells in the magnetometer and another on charge.

However, beware of fake or mislabelled 18650 cells – it has been said that up to 90% of those being sold on ebay, for example, are fakes. Even some with well-known brands actually contain dodgy cells with false labels. If the price looks to good to be true, chances are it is!

Beware of any 18650 which claims more than 4000mAh (we've seen claims of 10,000mAh and more!) – there is no such cell made. Realistically, 3700mAh is about the highest you'll find in legitimate cells. SC

PCBCART

Exceptional, Cost-effective Full Turnkey PCB Service from China's most experienced provider

With 10+ years' experience serving tens of thousands of international clients, our expanded custom PCB manufacturing, assembly and parts sourcing capabilities allow us to fulfill almost all kinds of PCB needs at reasonable price.

We insist each electronic project (including those still at prototyping stage) deserves superior quality PCB services, that's why we follow the strictest quality standards during production. Got a project ready to bring into reality? We're happy to discuss.

ISO 9001 SQCC · Pb LEAD FREE · UL

WWW.PCBCART.COM

sales@pcbcart.com

Amazing Light Patterns for the LED CHRISTMAS TREE

by Tim Blythman

So you've built a mammoth version of our LED Christmas Tree project from last month (or at least you're thinking seriously about doing so!). It's huge and has hundreds of LEDs. You want to make the tree do more than twinkle; you want it to really attract attention! Here is how you can make the most of the hardware, with some clever software to control it.

You would have seen our incredible stackable Christmas Tree project last month. It cleverly combines many small, low-cost boards with eight LEDs each to form an illuminated tree of just about any size. If you're enthusiastic, it could easily turn into the biggest SILICON CHIP project you've built, so we've created a program and some more sample Arduino code to help you achieve that and get the best out of it.

The software presented here allows you to experiment with your tree layout without having to do any soldering at all. It will show you what your tree will look like (up to a maximum of ninety-nine boards), and also tell you the order in which their shift registers are addressed.

This program also allows you to generate Arduino code (which is of course C/C++ compatible) to create patterns based on the physical and logical locations of the LED boards and individual LEDs within the overall tree. This means you can generate patterns such as light radiating up the tree from the base, moving side-to-side, star bursts or various other geometric patterns.

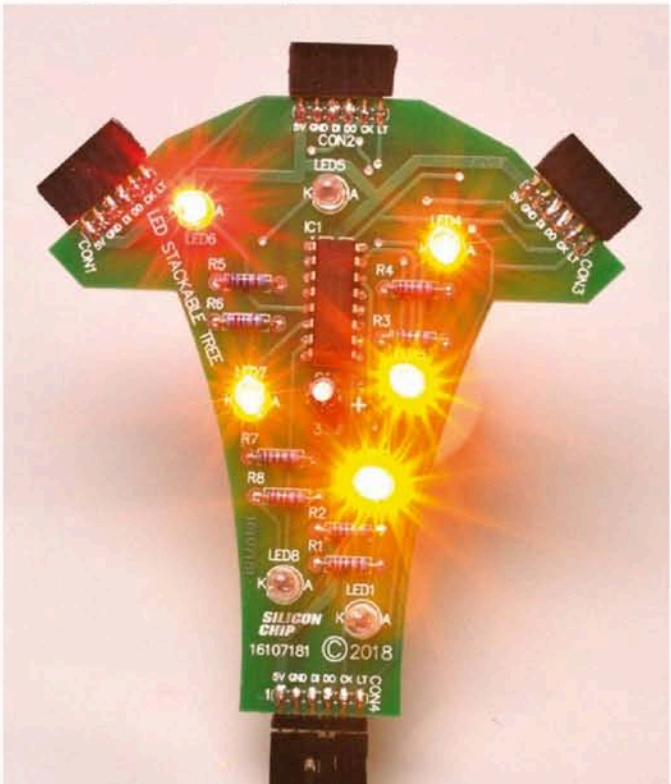

But wait, there's more! No, you don't get a free set of steak knives. But the software presented here can also interface to the Christmas LED Tree via the Digital Interface Module and send it commands to control an attached tree. You can click on individual LEDs and watch them turn off and on in real time.

You can also use it to generate the commands for a given illumination pattern, allowing it to be delivered to the Tree later, using separate software (eg, Arduino or BASIC code).

And in case you haven't built the Digital Interface Module but have a spare Arduino board lying around, we'll present some Arduino code to allow you to emulate some of its basic features, so you can use that Arduino to drive your tree with these more advanced patterns.

LED Tree Data Map Program

This application is written

in the Processing language, which also happens to be the origin of the Arduino programming language. If you haven't heard of it before, see the panel at right for more information.

The general idea behind the LED Tree Data Map Program is that the graphical interface gives you a virtual view of your Tree.

You build it by adding tree boards on top of existing boards, by clicking on the branch location where you want to add them.

This is useful both for experimenting to see what size and shape you want to make your tree but also, once you have built it, you can create an identical tree in the software, which then produces the data you need to drive its LEDs in various patterns.

Installing the software

We've created pre-compiled Windows and Linux versions of the LED Tree Data Map Program. The Linux version has been complied for three platforms: x86 (32-bit), x64 (64-bit) and Raspberry Pi. All four versions are available for download from the SILICON CHIP website.

There is no installation as such; you just need to extract the relevant executable from the ZIP archive to a folder on your computer and then run it. But since Processing is based on Java, you need to have the Java Runtime Environment installed on your PC to run the compiled programs.

The easiest way to ensure that you have an appropriate version of Java installed is to download and install Processing.

You can get it from:
https://processing.org/download

We haven't provided a compiled Mac version of the software since we don't have the hardware to do so. But if you have a Mac, you can use the Processing software to compile the supplied source code.

You can also use the Processing software to make changes to our software and re-compile it if necessary. We used Processing version 3.37 to create and test the program.

Building a tree

When you first open the program, a single LED Christmas Tree board appears at the bottom of the window.

When you move the mouse cursor to a location where clicking will lead to an action, a circle is shown. A large

What is "Processing"?

The clever little program we have put together as part of this article has been written in a language called Processing. You may not have heard of it, so let us explain. . .

Processing is a programming language which is designed to allow people to easily create visual content. It is an open-source, cross-platform project, meaning that anyone can get a copy of the source code and it's designed to run on a variety of different operating systems. It can even run on the Raspberry Pi and some other single board computers.

If you want to create an app for your phone or tablet, there's even an Android-compatible mode, although we haven't tried it ourselves.

We have never really needed to use its particular features before. But in this case, being able to create a graphically interactive and intuitive program was the deciding factor.

The Processing website at https://processing.org/ says that it is designed "for learning how to code within the context of the visual arts".

While that might seem a poor fit for an electronics magazine, it happens to suit us very well since it means that we can easily depict and manipulate the physical layout of hardware on-screen.

By the way, the language used in the Arduino IDE is called Wiring and is built on the Processing language. If you are familiar with Arduino programming, you will find that the Processing IDE (Integrated Development Environment) is nearly identical to the Arduino IDE, apart from the colour scheme.

So it seems Processing has a similar role in teaching graphical programming as the Arduino does for teaching embedded programming.

Processing is written in Java and when it compiles projects into stand-alone executables, they run on the Java platform as well. This was another reason we chose processing. While the majority of our readers run Windows, we don't want to exclude those who have a Mac or run Linux.

And since we could create a stand-alone version of our program, you don't need to install the IDE to use it.

The language used is Java, which is similar to C/C++, so programmers familiar with those languages (or the many similar procedural languages which have been inspired by them) should have no trouble adapting.

There are some some small differences; for example, the #define and #include "preprocessor directives" are not used, but you can import Java libraries, which we have had to do to add clipboard functionality to our program.

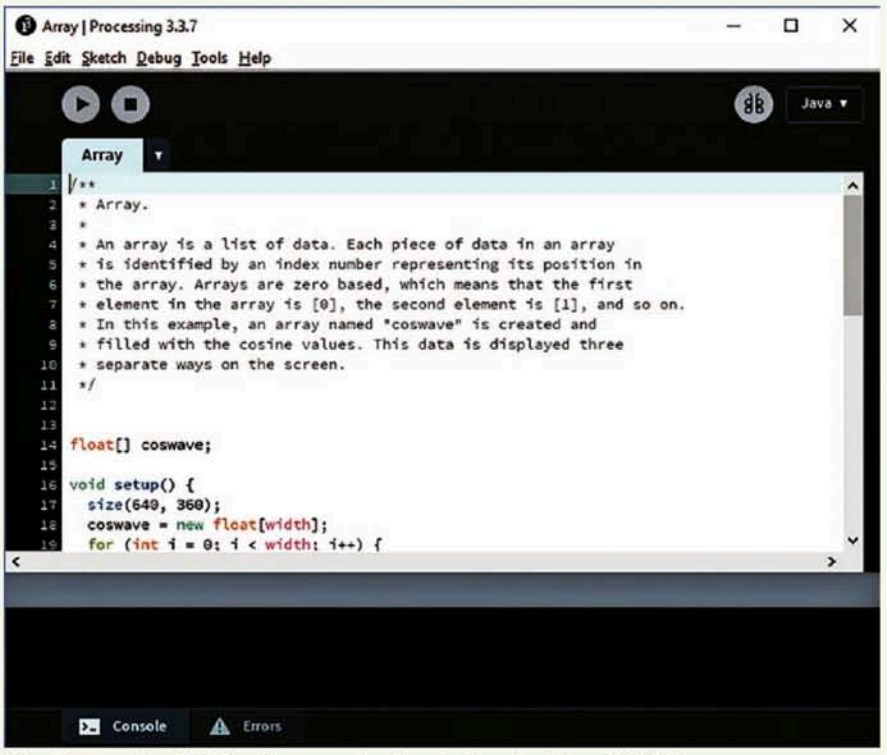

The Processing IDE looks very similar to the Arduino IDE. You can even see some of the language similarities, eg, the 'setup()' function.

Fig.1 (left): when the software is launched, a single "root' board is present. Simply left-click on the location where you want to add another board and it will appear. Right-click to remove it. The white dots also indicate which LEDs have been toggled on by clicking.

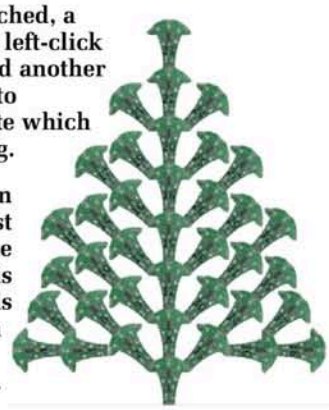

Fig.2 (right) : here's a representation of the 38-board version from last month's front cover. It only takes a minute or two to set it up. One useful aspect of this software is you can see whether any boards would overlap in your design – and you can even test a tree up to 99 boards in size to see how it would look.

green circle appears in places where you can add another branch to the tree (see Fig.1). As the tree gets bigger, you can use the "=" (+) and "-" keys on your keyboard to zoom in and out and the arrow keys to resize the window.

The program automatically assigns a number to each PCB, which is displayed on top of that board. This indicates what order the boards receive data as it passes through the shift registers on each board.

This assumes of course that any unconnected ends have their DO and DI pins bridged, as explained in the article last month.

You can remove branches (one at a time) in reverse order by right-clicking instead of left-clicking. This allows you to "backtrack" which is handy if you make a mistake but also useful if you are experimenting to see which of various different tree configurations is best.

The program assumes that the boards are simply butted against each other rather than being spaced slightly as if they were fitted with headers.

But given that you can plan with precision how the tree will look using this software, it is well-suited to creating a permanent arrangement, with the boards joined by short lengths of stiff wire.

Fig.2 shows the large tree in the introduction of last month's constructional article re-created in the LED Tree Data Map program.

Driving the Tree directly

If you've built the Digital Interface Module and have some LED Christmas Tree boards connected to it, you can control this combination directly from the LED Tree Data Map Program. Press the "," (<) and "." (>) keys on your keyboard to scroll through the displayed serial ports until the port corresponding to the LED Tree Control Board appears, then press the "s" key to connect to it.

The port name turns green if connection is successful. Assuming the physical layout matches the layout you have created in the program, clicking on one LED on the screen will cause it to toggle on and off, both on-screen and on the actual board. Of course, if the two layouts are different, anything could happen!

A handy feature is that you can press the "t" key to copy the current state of the LEDs to the clipboard, from which it can be pasted into a text editor for manipulating. This data is in the form of hexadecimal digits preceded by a "v" and followed by a "V" to match the 9600 baud HEX SPI format of the LED Tree Control Board.

A simple way to use this data is to paste it into a serial console program (such as TeraTerm, PuTTY or even the Arduino Serial Monitor), which will then send it on to the Digital Interface Module and on to the Tree.

You could save a number of these Tree states to a text file in order and send them to a serial port using another program, or even the following command from a Windows command prompt (assuming your file is called "test.txt"):

```
copy test.txt \\.\COM30:
```

Making a map of the Tree

The software does not have any functions to save an image of the tree you have created but you can use your operating system's screen capture function to make a copy of the map once you have settled on a layout. In Windows, you can do this by pressing ALT+PrintScreen and then loading MS Paint (or another image editing program) and pressing CTRL+V. You can then save the resulting image to a file.

This is a good idea, so that you will remember exactly where to wire the boards when you are building the tree (if you haven't already).

Pressing the "c" key on the keyboard copies the current layout information to the clipboard, in the form of Arduino code. We'll now explain how that can be used.

Controlling the Tree with an Arduino

In the constructional article last month, we explained how to use a basic Arduino sketch to make the LEDs in the tree twinkle. But with the code created using the "c" key, you can do much more. Once it's in the clipboard, the generated code can be pasted directly into a blank Arduino sketch created in the free Arduino Integrated Development Environment (IDE).

If you haven't used the Arduino IDE, you will need to download it from the

```
#define LED_BOARD_COUNT 4
int led_board_rotation[LED_BOARD_COUNT]={0,-1,0,1};
int led_board_depth[LED_BOARD_COUNT]={0,1,1,1};
int led_board_x_coord[LED_BOARD_COUNT]={320,262,320,378};
int led_board_y_coord[LED_BOARD_COUNT]={639,516,490,516};

#define LED_PIXEL_COUNT 32
int led_pixel_x_coord[LED_PIXEL_COUNT]={
   331,333,341,348,320,285,300,309,256,234,222,203,173,154,196,234,
   331,333,341,348,320,285,300,309,399,424,448,476,465,436,416,390
   };
int led_pixel_y_coord[LED_PIXEL_COUNT]={
   619,586,561,527,514,521,565,610,495,470,446,418,429,458,478,504,
   470,437,412,378,365,372,416,461,510,488,476,457,427,408,450,488
   };
```

Fig.3: sample data generated from a four-board tree. This includes information about the position of each board and LED in the tree, which the Arduino (or other) software can then use to calculate which LEDs should turn on when, to give particular patterns of light.

EMS Since 1999

LEACH

Reliable partner for electronic contract manufacturing

IPC Member

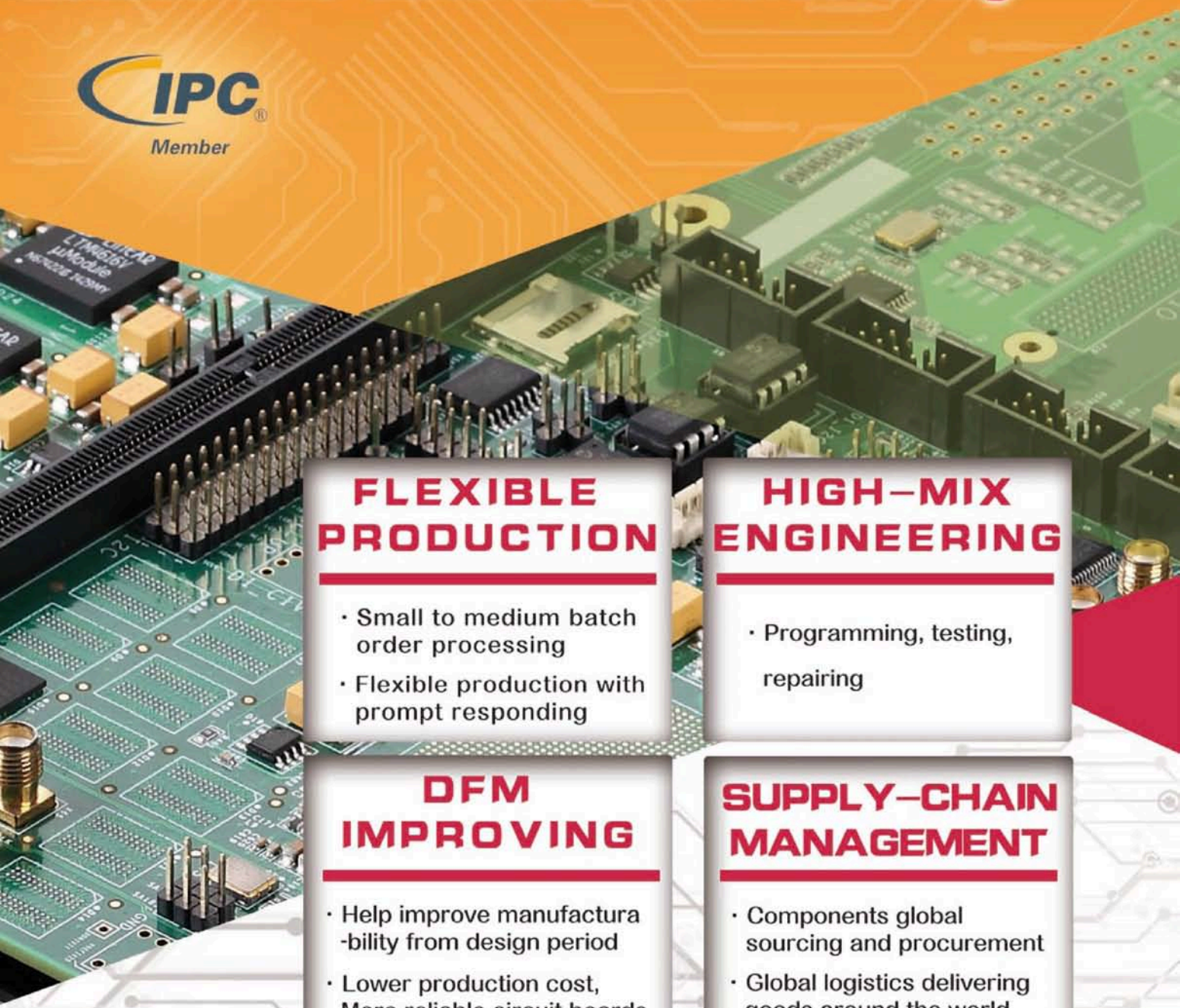

FLEXIBLE PRODUCTION

- Small to medium batch order processing
- Flexible production with prompt responding

HIGH-MIX ENGINEERING

- Programming, testing, repairing

DFM IMPROVING

- Help improve manufactura -bility from design period
- Lower production cost, More reliable circuit boards

SUPPLY-CHAIN MANAGEMENT

- Components global sourcing and procurement
- Global logistics delivering goods around the world

LEACH (HK) Co., Ltd Electronic Contract Manufacturing Turnkey Solution
LEACH (SZ) Co., Ltd info@leach-pcba.com www.leach-pcba.com

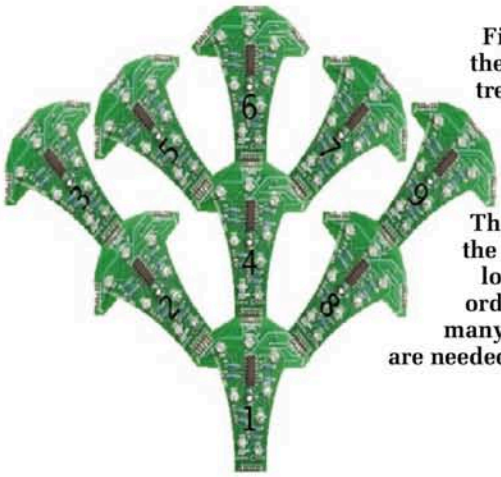

Fig.4: the design for the small nine-board tree, used to demonstrate some of the patterns that our code is capable of generating. The program reports the board numbers in logical shift register order, as well as how many LEDs and boards are needed for construction.

following link: www.arduino.cc/en/main/software This program is used to write "sketches", as Arduino programs are known, as well as upload them to an Arduino board.

The web page at www.arduino.cc/en/Guide/HomePage explains the basic workings of the IDE and Arduino-compatible boards. For the examples below, you just need to load the sketch file, select the correct board type and port from the "Tools" menu and then click the "Upload" button to test the sketch.

We've created a few sample sketches to show how to use the data from the LED Tree Data Map Program. Fig.5 shows the wiring required to connect the Arduino board to your Tree. We used an Uno clone for our tests but these sketches should work on just about any Arduino-compatible board.

The connections are as follows:

Arduino	'Root' Tree board
5V	5V
GND	GND
D2	DI
D3	DO
D4	LT
D5	CK

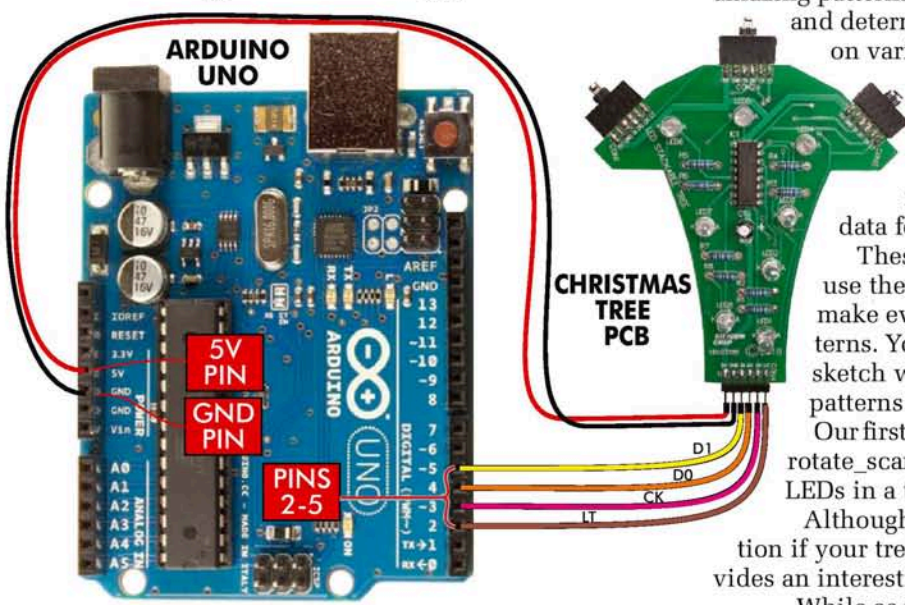

Fig.5: this shows how you can drive the LED Christmas Tree from an Arduino. While we gave a simple test sketch at the time, this month we're also providing a general-purpose interface sketch which allows this configuration to work with our new software.

Fig.3 shows the data generated for a simple case of four boards, with one sub-board connected to each of the three branch connections on the root board.

The first line, starting with #define, simply tells the program how many boards are in use. This value is also used to dimension the following arrays which contain information about the location of each board.

The second line defines the "led_board_rotation" array which contains an integer value for each board indicating the orientation of the board. A value of zero means the board is parallel to the root board, while negative values indicate anti-clockwise rotation and positive values indicate clockwise rotation, in multiples of 45°. So +1 = 45° clockwise, +2 = 90° clockwise, -1 = 45° anti-clockwise, etc.

The third line defines the "led_board_depth" array which indicates how far each board is from the root board. The root board depth is zero, the boards connected directly to the root board have depth one and so forth. This is a handy approximation to the vertical position of each board.

The fourth and fifth lines define arrays named "led_board_x_coord" and "led_board_y_coord" which give the cartesian coordinates of the bottom middle of each board. The root board is always at 320,639 with the values ranging from zero up to 639.

Increased x values indicate boards which are further to the right while decreased y values indicate boards which are further up.

While these values could potentially be useful in some cases, most patterns would use the individual LED coordinates which are what is provided by the remainder of the code.

The second #define indicates how many total LEDs there are in the tree (which is always eight times the number of boards) and the final two arrays contain this many integers. Those integers are the cartesian coordinates of each LED, in order from first to last in the shift chain, using the same coordinate system as described above for the boards.

Using some simple calculations, you can create some amazing patterns by checking the coordinate of each LED and determining whether or not to turn it on, based on various geometric patterns.

Example sketches

We have provided five sample sketches, to show off some of the patterns that it's possible to generate once you have the data for your Tree.

These are just the starting point; you could use them as-is or you could expand on them, to make even more interesting and spectacular patterns. You could even combine them into a single sketch which can cycle through several different patterns over time.

Our first example sketch is named "9_Board_Tree_rotate_scan.ino" and it illuminates each group of LEDs in a tree depending on their rotation.

Although this won't strictly give a left to right motion if your tree has loops or reverse curves, it still provides an interesting display.

While as the name suggests, it contains the data to suit a Tree made from nine separate boards (as shown in Fig.4), it is not limited to being used in this way.

You can use it with a Tree made from any number

of boards in any configuration.

You simply need to replace the co-ordinate definitions at the top of the file with those generated from your Tree design, using the method described above.

Nine boards were chosen simply because we felt that four boards were not enough to really show off the features of this software.

You can change the data to suit your tree, of any size, in each of the five examples provided.

The code will adjust to suit your Tree, as it determines the minimum and maximum values at runtime in the setup() function.

The second example sketches is called "9_Board_Tree_depth_scan.ino" and it first illuminates all the LEDs on the root board, then on all the boards with depth = 1, then depth = 2 etc.

This gives the effect of light shooting up and out the tree branches. Its code is virtually identical to the first example, with just one line changed.

The third and fourth examples are called "9_Board_Tree_x_scan.ino" and "9_Board_Tree_y_scan.ino". These work similarly; the former causes LEDs in the tree to light up from left-to-right, then right-to-left, creating a vertical line of light which moves across the tree and it repeats forever.

Similarly, the latter causes a horizontal line of LEDs to light up from bottom-to-top and then top-to-bottom.

The final example is the most complex and this is "9_Board_Tree_starburst.ino", which causes the LEDs in the middle of the tree to light initially, and then the light spreads outwards in growing circles.

Saving memory

If you have a large tree, you may run out of RAM to store the resulting large data arrays.

In that case, you would need to add "const PROGMEM" to the start of each line defining an array. That will cause them to be stored in flash rather than RAM.

But note that you will also need to make changes to the way that the program accesses the data; but we won't go into detail on that aspect here.

If you want to see some examples of how to access PROGMEM variables, refer to: www.arduino.cc/reference/en/language/variables/utilities/progmem

General purpose Arduino control board

Finally, we're providing an extra Arduino sketch which provides an interface between the LED Tree Data Map Program and an LED Christmas Tree, even if you haven't built the Digital/SPI Interface Module described last month.

You just need an Arduino board and some jumper wires. It only works with the 9600 baud HEX SPI mode described last month for the Digital Interface Module, as there isn't an easy way for most Arduino boards to detect the baud rate their hosts are using. But that's certainly good enough to do some testing or maybe even drive a Tree in a Christmas display.

Connect the tree to the Arduino using the same wiring as the previous example (Fig.5) and load the sketch, which is called "Arduino_HEXmode_Tree_emulator.ino". Like the other sketches provided, it should work on most Arduino boards.

The procedure for selecting the serial port in the software is the same as described above; use the "," (<) and "." (>) keys to change the serial port, then press "s" to connect. SC

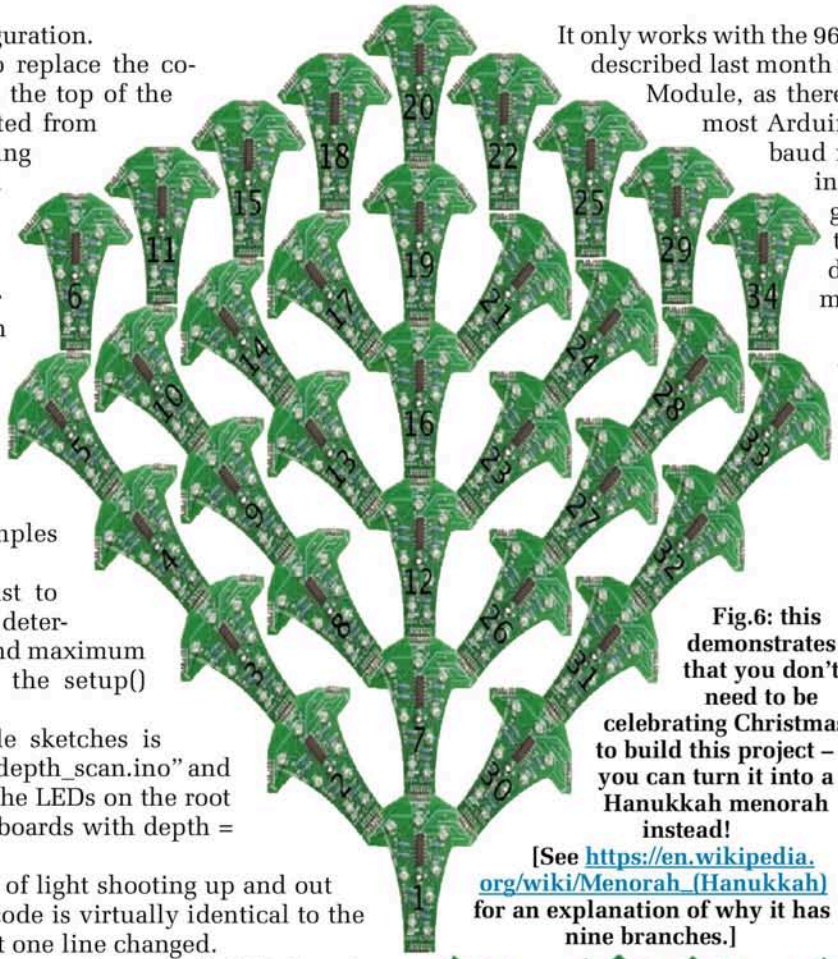

Fig.6: this demonstrates that you don't need to be celebrating Christmas to build this project – you can turn it into a Hanukkah menorah instead!

[See https://en.wikipedia.org/wiki/Menorah_(Hanukkah) for an explanation of why it has nine branches.]

MUSICAL CHRISTMAS STAR DIY PROJECT FROM PICOKIT

Create some holiday cheer with a DIY Musical Christmas Star project from PicoKit. This soldering kit has movement sensing to light some colourful LEDs and play some Christmas carols.

Optionally, you can upload your own songs with the PicoCODER programming cable from PicoKit (just $15 extra if bought together with the PicoSTAR).

The PicoSTAR kit is supplied with a pre-programmed PIC12F510 from Microchip Technology and is compatible with PicoKit's own ALPHA Code programming software and coding with C and ASM languages through the MPLAB-X software from Microchip Technology.

Special Offer for SILICON CHIP Readers $17 PLUS GST & P&P

PicoKit - Maker Space Solutions
Upper Caboolture 4510, QLD
Phone: 07 5330 3095
www.picokit.com.au

The ARDUINO Mega and Nano

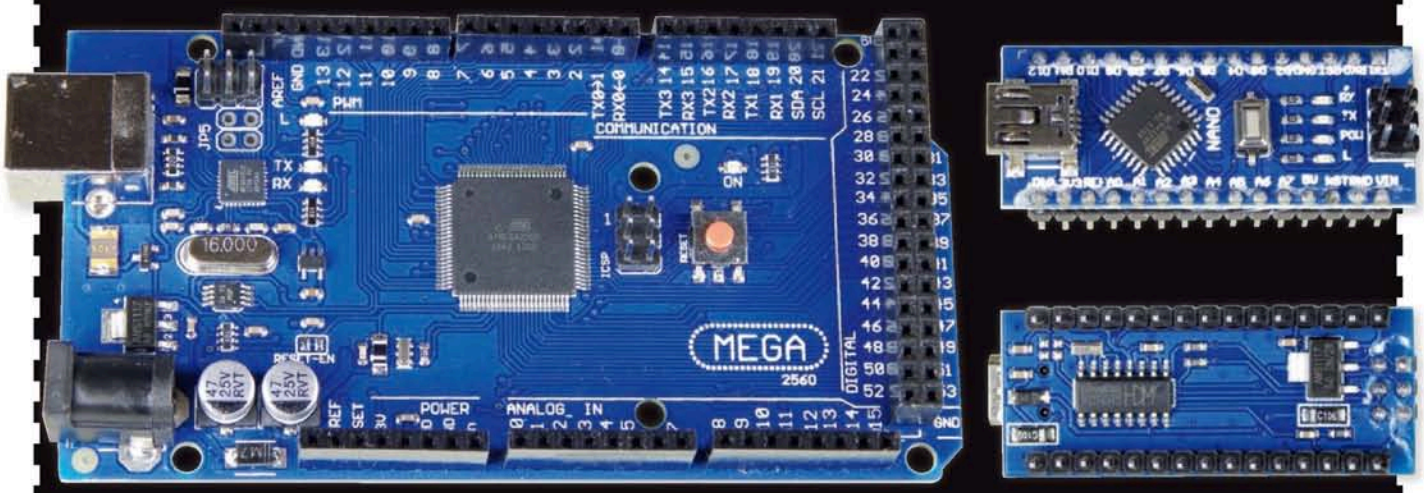

The Arduino Uno is probably the most widely used micro in the world. We've used it in quite a few of our projects. But you may not be aware of its "little brother", the Nano, or its "big brother", the Mega 2560. Jim Rowe explains the differences between these Arduino variants.

In this article, we'll describe the latest "Revision 3" versions of all three modules. We won't mention the earlier versions or other variants like the Leonardo or Duemilanove.

That's partly because those other variants are less popular nowadays than the three modules discussed here. Let's start with the Nano, which is smaller than and slightly cheaper than the Uno.

The photos show just how tiny it is, measuring only 45 x 18 x 18mm. Despite its small size, most of its capabilities are identical to those of the Uno. In one respect, it's actually better, offering eight analog-to-digital converter (ADC) input channels instead of six.

It uses the same CPU as the Uno, an ATmega328P but it has the 32-lead TQFP (SMD) package version rather than the 28-pin DIP version used in the Uno. Two of those extra pins are the additional analog inputs.

Like the Uno, it has 32kB of flash memory, 1kB of EEPROM and 2kB of static RAM, a RISC instruction set including two-cycle 8x8 multiplication, 23 programmable I/O lines, 32 8-bit working registers, two 8-bit timer/counters and one 16-bit timer/counter (with prescalers), a master/slave SPI serial interface and a byte-orientated I^2C interface.

But keep in mind that the Nano's small size means that its I/O pins are broken out to two 15-pin SIL connectors. As a result, it's not directly compatible with Arduino shields designed to plug into the Uno. It also lacks the Uno's concentric DC power input socket and instead, receives its power via the mini-USB socket.

There are adaptor shield modules available for the Nano but it's best regarded as the Arduino most suitable for mounting directly on another PCB. That's the way we used it in our Brainwave Monitor project, described in the August 2018 issue of SILICON CHIP (siliconchip.com.au/Article/11185).

Inside the Nano

The full circuit of the Arduino Nano is shown in Fig.1. This circuit is for the lower-cost Chinese-made version, which uses a CH340G chip for the USB interface instead of the FT232RL chip used in the US/European version. Otherwise, the two versions are essentially and functionally identical.

It has a 6-pin header for in-circuit serial programming (ICSP) or SPI serial bus connections, a reset pushbutton switch (S1) and four tiny LEDs to indicate power on, serial data transmit/receive and a general purpose/programming indication LED connected to pin D13 (SCK). These are all identical in function with those on the Uno.

As mentioned above, all the micro's I/O pin connections are brought out to pins on the two 15-pin SIL headers, J1 and J2.

So basically, the Nano can be regarded as a "Bonsai" version of the Uno (or perhaps more appropriately "penjing" given its Chinese origin). This, and its more standard SIL header layout, makes it better suited for building into other projects.

The Mega 2560

The Mega 2560 is considerably larger than the Nano or the Uno, at 108 x 53 x 14mm. Not surprisingly, it is also more capable.

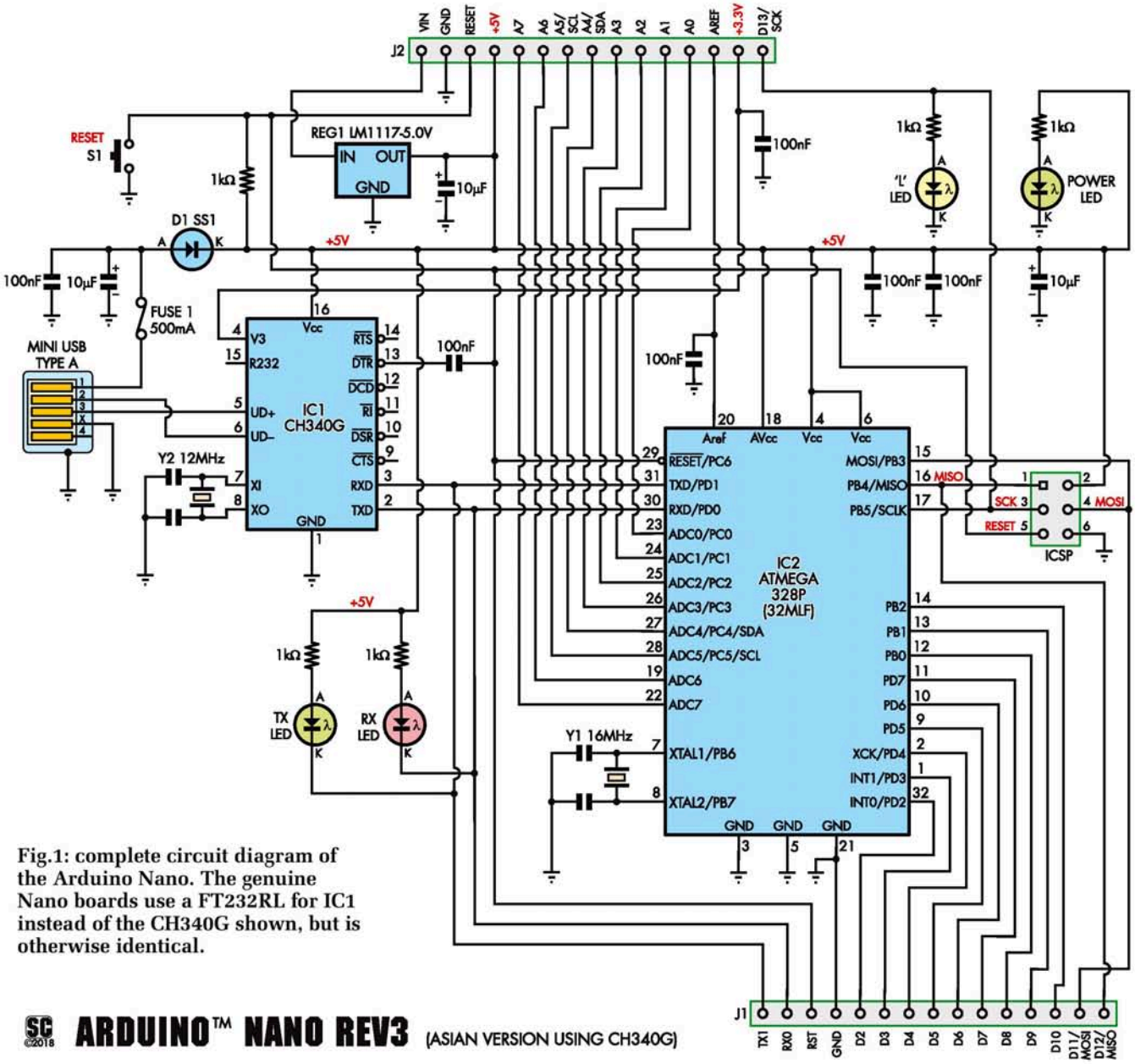

Fig.1: complete circuit diagram of the Arduino Nano. The genuine Nano boards use a FT232RL for IC1 instead of the CH340G shown, but is otherwise identical.

ARDUINO™ NANO REV3 (ASIAN VERSION USING CH340G)

It uses an ATmega2560 micro, essentially a larger version of the ATmega328P chip used in the Uno and Nano. It offers 256kB of flash memory instead of 32kB, 4kB of EEPROM (vs 1kB) and 8kB of static RAM (vs 2kB). So it has eight times as much flash plus four times as much EEPROM and static RAM.

Since the ATmega2560 comes in a 100-pin TQFP (SMD) package, it also has many more programmable I/O pins; 86 compared with 23. It also has 16 ADC inputs, compared with six for the Uno and eight for the Nano.

Significantly, there's now also a total of four programmable USART serial I/O ports, compared with the single port on the Uno and Nano. Other features include four 16-bit timer/counters instead of just one in the Uno/Nano.

The ATmega2560 also has a slightly larger set of instructions: 135 compared with the 131 offered on the Uno or Nano.

Three of the instructions are used to access and manipulate the extra flash memory of the ATmega2560. These instructions are EIJMP (extended indirect jump), EICALL (extended indirect call), ELPM (extended lead program memory). The last additional instruction (BREAK) is for use with the on-chip debugger (JTAG).

But there's still the on-chip two-cycle multiplier, the same set of 32 eight-bit working registers, a master/slave SPI serial interface and a byte-orientated I^2C interface.

So the main advantages of the Mega 2560 are the larger memories, the much larger number of programmable I/O pins and of course the three additional programmable USART serial I/O ports.

One interesting point to note about the Mega 2560 is that it's designed to be compatible with Uno shield boards. In effect, all of the extra analog and digital I/O capabilities are added to the right-hand end, as you can see from the photo opposite.

This means that standard Uno shields can be plugged into the sockets on the left-hand end of the PCB and they will work normally.

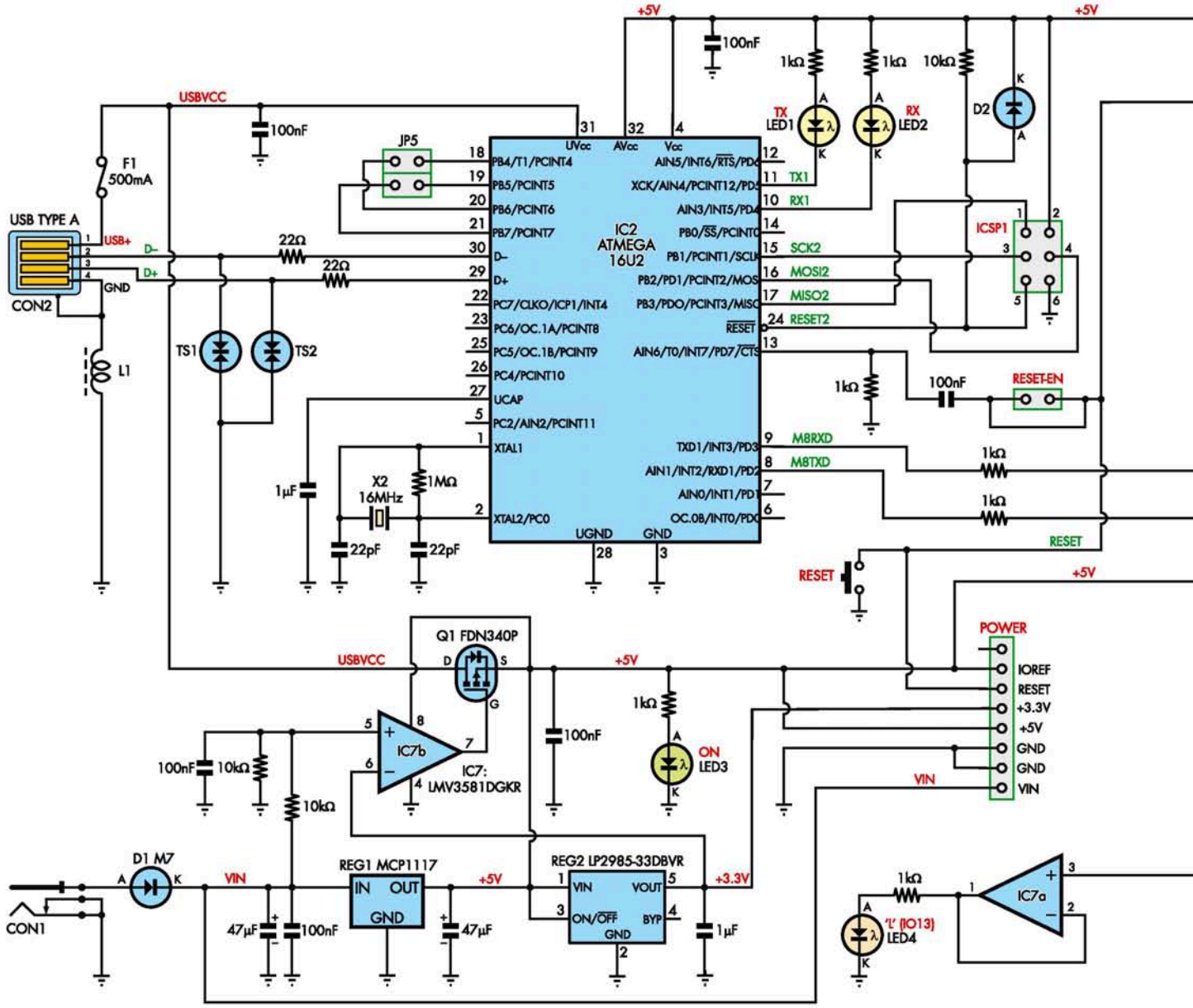

ARDUINO™ MEGA 2560 REV3

Fig.2: complete circuit diagram of the Arduino Mega 2560. The ATmega16U2 (IC2) is used to handle USB communications.

The 6-pin ICSP/SPI header (just to the right of the main CPU) is also in exactly the right position to mate with the socket on Uno shields.

The Mega's additional USART port connections are brought out to an extra 8-pin SIL socket at upper right, with the I²C SDA and SCL pins at the far end.

The analog input connections are brought out to another two 8-pin SIL sockets along the bottom right, with one of these sockets effectively replacing the 6-pin socket of the Uno. The additional digital I/O connections are brought out to an 18x2 DIL socket mounted vertically on the far right of the PCB.

So it's all quite logical and fairly easy to follow, as well as being almost 100% compatible with the Uno and shields intended for use with it.

There are also expansion shields available specifically for use with the Mega 2560, which take advantage of its extra capabilities. Banggood has such a prototyping shield available for around $6.00, together with a small (17 x 10) breadboard.

Inside the Mega 2560

The full circuit of the Mega 2560 is shown in Fig.2. We've redrawn it from the official circuit diagrams because we found these a little hard to follow in terms of signal flow.

As with most Uno boards, the Mega 2560 uses a separate ATmega16U2 processor to handle USB communications. This is IC2, shown on the left-hand side of Fig.2, with the main ATmega2560 (IC1) over on the right-hand side. All of the circuitry on the left associated with IC2 is virtually the same as that of the Uno and that's also true of the power supply circuitry at lower left.

As with the Uno, the Mega 2560 can be powered either via the USB connector (CON2) at upper left or via the nominal 9V DC input connector CON1, at lower left. And the circuitry associated with IC7b, Q1 and REG1 performs

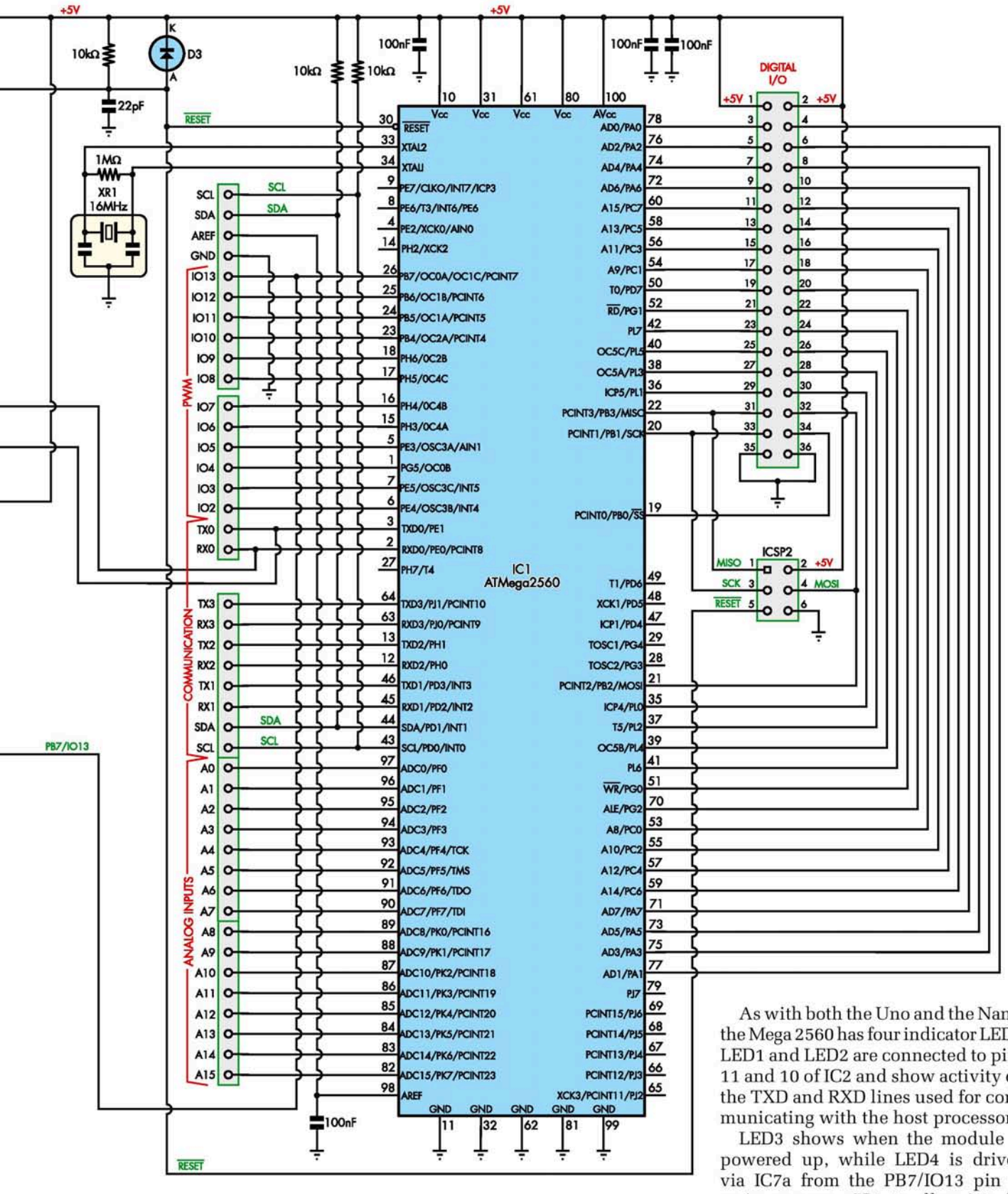

automatic switching between these power inputs.

Note also that the Mega 2560, like the Uno, provides a second 6-pin ICSP/SPI header for IC2, so that it can be reprogrammed if necessary. This additional header is marked as ICSP1 in Fig.2, whereas the ICSP/SPI header for the main processor is over on the far right and marked ICSP2.

As with both the Uno and the Nano, the Mega 2560 has four indicator LEDs. LED1 and LED2 are connected to pins 11 and 10 of IC2 and show activity on the TXD and RXD lines used for communicating with the host processor.

LED3 shows when the module is powered up, while LED4 is driven via IC7a from the PB7/IO13 pin of main processor IC1, to allow it to be turned on or off by program control. This is precisely the same as on the Uno or Nano.

Over on the right-hand side of Fig.2, you can see how all of the additional

THREE MAIN ARDUINO MODELS COMPARED

Property	Nano (Rev 3)	Uno (Rev 3)	Mega 2560 (Rev 3)
Main Processor (CPU)	ATMega 328P (32MLF)	ATMega 328P (28-pin DIL)	ATMega 2560 (100-lead TQFP)
Clock Frequency	16MHz	16MHz	16MHz
Flash Memory	32KB	32KB	256KB
EEPROM	1KB	1KB	4KB
RAM	2KB	2KB	8KB
Instruction set	131 instructions	131 instructions	135 instructions
On-chip 2-cycle Multiplier	Yes	Yes	Yes
Internal calibrated oscillator	Yes	Yes	Yes
Programmable I/O lines	23	23	86
General Purpose working registers	32 x 8-bit	32 x 8-bit	32 x 8-bit
Timer/Counters with Prescaler	2 x 8-bit, 1 x 16-bit	2 x 8-bit, 1 x 16-bit	2 x 8-bit, 4 x 16-bit
Real-Time Counter with separate oscillator	Yes	Yes	Yes
10-bit ADC channels	8	6	16
PWM channels, Resolution	6 (2 x 8-bit, 1 x 16-bit)	6 (2 x 8-bit, 1 x 16-bit)	10 (4 x 8-bit, 12 x 16-bit)
Programmable Serial USART	1	1	4
Master/Slave SPI Serial Interface	Yes	Yes	Yes
Byte-orientated 2-wire (I2C) Interface	Yes	Yes	Yes
Module size (L x W x H, mm)	45 x 18 x 18	75 x 53 x 14	108 x 53 x 14
Current Price Range (USD)	$22.00	$22.00	$38.50

Shown above are the main differences between the Arduino Nano, Uno and Mega. The prices shown are from https://store.arduino.cc, however, the modules can be found cheaper elsewhere online

Below: the three Arduino boards shown at close to actual size for comparison. While the Arduino Mega is directly compatible with the Arduino Uno, the Nano uses a different pin layout and structure, even though its performance specifications are identical.

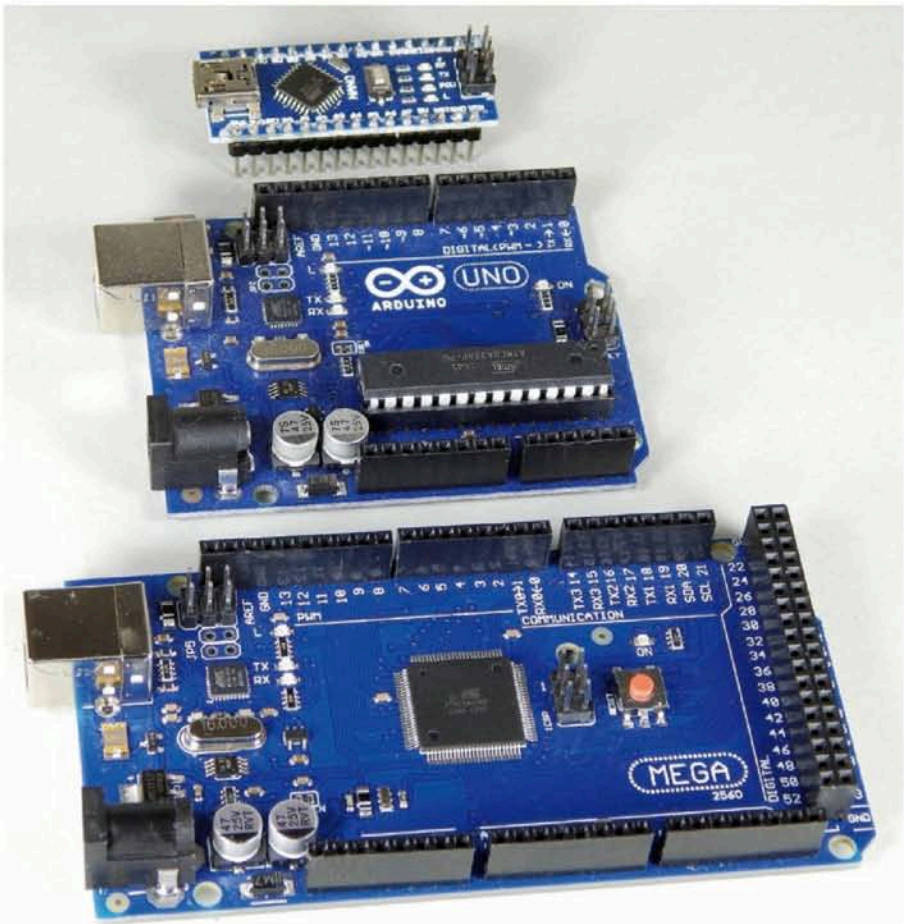

I/O connections of the ATmega2560 (IC1) are brought out to the various SIL sockets and the 18x2 DIL socket.

The two 8-pin SIL sockets for the expanded range of ADC inputs are shown at lower left, with the 8-pin socket above them for I^2C and the RX and TX lines for the three additional USART ports (RX1-TX3).

Then above these again there's the fourth 8-pin SIL socket and the 10-pin socket, which basically duplicate the functions of the same socket on the Uno: RX0 and TX0, followed by IO2-15 and then GND, AREF, SDA and SCL.

To the right-hand side of IC1, in addition to its ICSP/SPI header (ICSP2) there is the 18x2 DIL socket for the ATmega2560's extra digital I/O pins, plus two pins carrying the +5V supply line (pins 1 and 2), and another two pins to the module's ground (pins 35 and 36).

So as you can see, the Arduino Mega 2560 is very much an expanded version of the Uno. It has very similar processing power but with considerably more memory, three additional USART ports, 10 additional ADC inputs and more than 60 extra digital I/O lines. It is software compatible with both the Uno and the Nano.

These features allow it to run much larger sketches and control more peripheral devices. It's the Arduino you'll probably need for applications that are too large for the Uno or Nano.

It does cost about twice that of the Uno but it's still quite good value for money when you consider what it offers.

The comparison table above summarises the features of the three Arduino versions we've discussed here. At the bottom of the table, it shows comparative price ranges for the three versions but these will vary depending on exchange rates, vendors and other factors.

Finally, note that Microchip recently purchased their rival Atmel, the manufacturer of the ATmega chips used in these boards; hence the links below to the product pages refer to the Microchip website.

Handy links

store.arduino.cc/arduino-nano
store.arduino.cc/arduino-mega-2560-rev3
microchip.com/atmega328pb
microchip.com/ATmega2560
banggood.com/search/mega2560-1280-proto-shield.html SC

A VERY MAKER CHRISTMAS

Jaycar Electronics

RASPBERRY PI 3B+

$84.95

SINGLE BOARD COMPUTER XC-9001

The latest version of the Raspberry Pi. Tiny credit card size computer. Supports Power-over-Ethernet (with separate PoE HAT). Faster processing and networking. 1.4GHz 64-bit quad-core processor. Dual Band 2.4GHz & 5GHz Wireless LAN. Bluetooth® 4.2 technology with BLE.

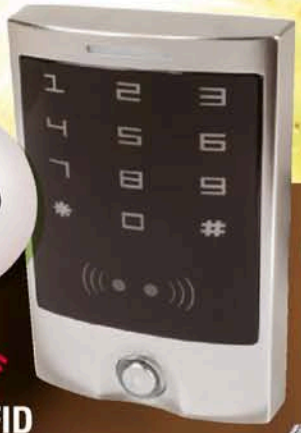

$249

NEW 2018

WI-FI RFID Access Keypad

LA5358 *Due Early December*

Control doors remotely with your Smartphone via free app. Used as a standalone access card reader or controlled by an external access controller. Includes a timer function allowing people to access for a temporary period of a time.

- 12VDC
- IP65 rated
- 83(W) x 125(H) x 22(D)mm

Learn About... RADIO-FREQUENCY IDENTIFICATION (RFID)

RFID is a wireless technology for reading information stored on a special RFID Tag. There are two types of RFID Tags, active and passive. Passive RFID Tags don't require batteries, they get their energy from the RFID radio frequency, making them ideal for many applications such as secured entry access, credit card payment systems, and product tagging.

$299

NEW 2018

4 DOOR RFID ACCESS CONTROLLER LA5359

Control up to 4 doors, 4 readers and 4 exit buttons. Perfect for large or small businesses with up to 20,000 users and permanent entry logging up to 100,000 times.

- 12VDC
- 201(L) x 125(W) x 32(H)mm

$89.95

NEW 2018

RFID ACCESS CARD READER LA5351

A robust mini access card reader which can be used as standalone or slave with an Wiegand 26 input access control system. Reads EM & HID RFID cards. Large capacity for up to 10,000 users.

- 12VDC
- IP65 rated
- 48(W) x 103(H) x 23(D)mm

$399

FREE DELIVERY FOR ONLINE ORDERS*

CAPTURE & REPLICATE

HANDHELD 3D SCANNER

TL4250

Scan your desired objects and produce 3D files. Great for capturing real-world objects and storing them digitally. Compact and lightweight design allows you to move it around the desired target for scanning with ease.

- Connects via USB
- Scan up to 1000(D) x 1000(D) x 2000(H)mm

FREE DELIVERY FOR ONLINE ORDERS*

$899

BUILT-IN CAMERA

NEW GENERATION. SMART. LIGHT.

ADVENTURER 3 TL4256

Control print jobs via the cloud using FlashCloud and/or Polar Cloud. Compact structure. Ready to use and no levelling printing. Removable, heatable and bendable plate. Built-in camera function. Low noise operation. Prints up to 150(L) x150(W) x150(H)mm.

- 2.8" colour touchscreen panel
- Wi-Fi, USB & Ethernet connect
- Automatic filament feeding

**See website for details*

FLASHFORGE

WAS $59.95
$49.95
SAVE $10

PORTASOL® TECHNIC GAS SOLDERING IRON

TS1305

Compact, versatile, and reliable. Adjustable tip temperature up to 450°C with 60 min (approx.) operating time.

- 10-60W Equivalent electrical power
- Flint ignitor in end cap
- 170mm long

$39.95

NEW 2018

USB 3.0 ETHERNET CONVERTER YN8418

Provides a solution to connect modern Apple® MacBook® and Ultrabooks™ to internet using a LAN cable by converting a USB port to an ethernet port.

- Transmission speed: 100Mbps
- 150mm long cable

$99.95

NEW 2018

MONITOR STAND WITH USB HUB AND CARD READER XC4312

Designed to raise your monitor to a comfortable viewing height and de-clutter your desk the same time.

- Integrated 3 port USB 3.0 hub and memory card reader
- Single USB smart charging port
- 550(L) x 200(D) x 55(H)mm

XC4689

FROM $44.95

NEW 2018

USB 3.0 SATA HDD DOCKING STATIONS

Connect 2.5" or 3.5" SATA hard drives to your computer. Plug and play technology. USB 3.0 ready for fast data transfer.

- Transfer Rate: 430Mbps
- HDD capacity: 8TB

2.5" XC4687 **$44.95**
3.5" XC4689 **$59.95**

zip | own it now, pay later

Not sure what they'll love?
Grab a Jaycar Gift Card!

Catalogue Sale 24 November - 26 December, 2018

To order: **phone 1800 022 888 or visit www.jaycar.com.au**

Gifts For The Young Learners:

2 FOR $50 SAVE $9.90

$29.95 ea

NEW 2018

DINOSAUR DIG KIT KJ9033
Excavate 3 genuine dinosaur fossils. Includes genuine specimens, custom digging tools and learning guide.

GEMSTONE DIG KIT KJ9039
Dig up 3 genuine gemstones! Includes genuine specimens, custom digging tools and learning guide.

BUG EXCAVATION KIT KJ9040
Dig up and explore 3 amazing insects! Each specimen is perfectly preserved in transparent acrylic, so kids will be able to study their bugs from all angles.

GLOW IN THE DARK CRYSTAL KIT KJ9041
Grow amazing glowing crystals in your own home! Includes a learning guide packed full of interesting crystal facts and a real fluorite specimen!

See instore or online for full range

FROM $59.95
SAVE UP TO $20

DRAW ELECTRONICS WITH CIRCUIT SCRIBE
Kids can draw the circuits with a conductive pen and watch them come to life. Each kit includes a detailed sketchbook with examples and templates. Ages 8+.

BASIC KIT - 11-PIECE	KJ9340	**WAS $69.95**	**NOW $59.95**	**SAVE $10**
MAKER KIT 17-PIECE	KJ9310	**WAS $119**	**NOW $99**	**SAVE $20**
ULTIMATE KIT 32-PIECE	KJ9300	**WAS $149**	**NOW $129**	**SAVE $20**

WAS $24.95
$19.95
SAVE $5

MARS SOLAR ROVER KIT
KJ-9026
Learn about science and solar. Easy snap together construction. Ages 8+.

robotics for everyone
Edison

WAS $99.95
$79.95
SAVE $20

MEET EDISON ROBOT KIT KR9210
Compact, pre-assembled, pre-programmed with 6 robot activities set by barcodes and also be programmed using simple drag-and-drop programming blocks or a Python-like written language. Ages 5+.

ALSO AVAILABLE:
EDISON ROBOT CREATOR KIT KR9212
WAS $44.95 NOW $39.95 SAVE $5

Gifts For The Serious Makers:

WAS $169
$159
SAVE $10

RASPBERRY PI MEDIA PLAYER KIT XC9012
Includes everything you need to turn your HDMI TV into a customisable media centre. Includes: Raspberry Pi 3B, ABS case, HDMI cable, power supply and USB cable, mini wireless keyboard/trackpad with media functions, microSD card installed with media software.

WAS $99
$79
SAVE $20

37-IN-1 SENSOR KIT XC4288
Get more by purchasing this 37 modules-in-1 pack. Includes commonly used sensors and modules for Duinotech and Arduino®: joystick, microphone, temperature, IR, LED and more.

WAS $109
$99
SAVE $10

MEGA EXPERIMENTERS KIT XC4286
Contains a Arduino-compatible MEGA main board, a breadboard, jumper wires and a plethora of peripherals in a plastic organiser.
See website for details.

Make Your Own Christmas Cards With LED Lights

Surprise your family and friends with these creative Christmas cards! Use the LED starter kit from Chibitronics to provide a small circuit so you can entertain the young and old alike with a thoughtful Christmas greeting. Perfect with kids. Makes 6 cards.

Finished Project

SKILL LEVEL: BEGINNER
TOOLS: SCISSORS, GLUE, CARDBOARD AND A CREATIVE SPIRIT

WHAT YOU NEED:

1 X CHIBITRONICS LED STICKERS STARTER KIT	KJ9330	**$49.95**
4 X CR2032 3V LITHIUM BATTERY	SB2522	**$2.95 EA**

VALUED AT $61.75

NERD PERKS CLUB OFFER
BUY ALL FOR $49.95
SAVE OVER 15%

STEP-BY-STEP INSTRUCTIONS AT:
jaycar.com.au/christmas-cards

SPECIALS! 20% OFF

WAS $4.95
$3.95
20% OFF

LINE TRACE SENSOR MODULE XC4474
Measures the reflectivity of a surface with an infrared emitter/detector pair.
- VCC/OUT/GND pin connector

WAS $12.95
$9.95
20% OFF

3-AXIS ACCELEROMETER MODULE XC4478
Measures acceleration, detects impact and determines orientation. Perfect for robotics projects.

WAS $39.95
$31.95
20% OFF

LED DOT MATRIX DISPLAY XC4622
Large 32 x 16 pixel white LED display to create message boards, clocks, etc.
- 10mm LED pitch
- Can be daisy-chained for larger displays

WAS $14.95
$11.95
20% OFF

LILYPAD BOARD XC4620
Compact ATMega 32U4 based main board. A single chip handles main controller functions as well as USB connectivity.
- 9 Digital IO pins

Strobing Christmas Star:

STEP-BY-STEP INSTRUCTIONS AT:
jaycar.com.au/strobing-christmas-star
SEE OTHER PROJECTS AT:
www.jaycar.com.au/arduino

Sticking with tradition and going for the early days of electronics inspired us to make this kit. Using the traditional 555 Timer IC and a decade counter to make a strobing Christmas star pattern. Put on-top of the Christmas tree or just add to your Christmas décor. Add more globes for stunning bright star.

SKILL LEVEL: BEGINNER
TOOLS REQUIRED: SOLDERING IRON

WHAT YOU WILL NEED:

555 TIMER IC	ZL3555	**$2.25**
10µF CAPACITOR	RE6066	**$0.30**
1K RESISTOR	RR2774	**$0.48**
10K POTENTIOMER	RP7510	**$2.50**
EXPERIMENTERS BOARD	HP9556	**$4.95**
6VDC 800MA POWER SUPPLY	MP3145	**$17.95**
DC SOCKET	PS0519	**$1.95**
10 x 6V GLOBE	SL2673	**$1.30EA**
DECADE COUNTER	ZC4017	**$1.15**
5 x BC337 NPN TRANSISTOR	ZT2115	**$0.48EA**
5 x BC327 PNP TRANSISTOR	ZT2110	**$0.48EA**

Finished project:

VALUED AT $49.33

NERD PERKS CLUB OFFER
BUNDLE DEAL $29.95
SAVE 35%

FUN TO BUILD THIS HOLIDAY

WAS $44.95 **$39.95**
SAVE $5

Batteries not included.

PC Programmable Line Tracer Kit KJ8906

An educational introduction to the world of robotics and programming. Use either programming or line tracing mode. Requires some tools and batteries.
• 120(L) x 64(W) x 55(H)mm

KR3160

FROM $39.95

MOTOR CHASSIS ROBOTICS KITS
Includes motors, wheels, tyres and two pre-drilled mounting plates.
• One motor + gearbox per wheel.
• Motor voltage: 5-10VDC
2 WHEEL KR3160 **$39.95**
4 WHEEL KR3162 **$49.95**

TAMIYA

YG2740

FROM $18.95

4 SPEED GEARBOX / AXLE ASSEMBLY
Features an all plastic moulded gearbox and motor casing. Includes FA-30 type 3 volt electric motor, axle with 2 crank arm.
SINGLE YG2740 **$18.95**
DOUBLE YG2741 **$23.95**

$12.95

PULLEY SET YG2869
Typically used to transfer power in a small energy systems. Set includes 2 x each 50 & 25mm pulleys, 2 x 11mm pulleys, bushings, screws, nuts and 1m of rubber drive band.

YG2632 YG2630

FROM $8.95

GEAR SET AND SPUR GEAR SET
Gear set contains one pinion gear and two different sizes of radio gears. Spur gear set contains three different spur gears.
SPUR SET YG2632 **$8.95**
GEAR SET YG2630 **$9.95**

WAS $19.95 **$9.95**
HALF PRICE!

MINI ELECTRIC MOTOR EXPERIMENT KIT KJ9032
Demonstrates the basics of how the magnets, armature and commutator work together. Ages 8+.

WAS $18.95 **$14.95**
SAVE $4

SOLAR EDUCATIONAL KIT KJ6690
Experiment with solar energy - the energy source of the future. Designed to let you build your own solar models. See website for inclusion. Ages 8+.

WAS $19.95 **$12.95**
SAVE $7

CAN ROBOT KIT
KJ8939
Build wacky robots out of a coke can, a water bottle or wasted CDs! 6 robots to build. Solar powered. Ages 10+.

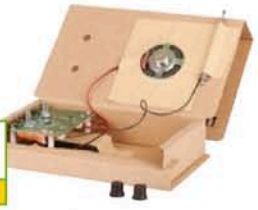

WAS $24.95 **$18.95**
SAVE $6

CARDBOARD RADIO CONSTRUCTION KIT KJ9021
Make your own AM/FM radio. No soldering needed. Requires 3 x AA batteries. Ages 8+.

Space Rail Construction Kit

KJ9001

GLOWS IN THE DARK!

WAS $49.95 **$39.95**
SAVE $10

Build your own marble rollercoaster with virtually unlimited track possibilities! Supplied with loads of pieces to make an 11m running track. Ages 15+.
• Multi-fit baseboard
• 710(L) x 210(W) x 350(H)mm

DIY PROJECTS FOR THE HOLIDAYS

Automate Your Home Or Upgrade Your Home Entertainment:

Digital Keypad
WITH RFID ACCESS CONTROL LA5353

Suitable to areas requiring stricter access control such as warehouse, bank etc. Housed in a sturdy IP65 vandal proof zinc alloy case. Support up to 2,000 users. Indoor/outdoor mounting.
- Backlit keypad
- LED indicator (Green/Yellow/Red)
- Built-in buzzer

WAS $129 $99
SAVE $30

WAS $69.95 $59.95
SAVE $10

NON-CONTACT INFRARED DOOR EXIT SWITCH LA5187

Replace your old push button switch to this infrared sensor switch to automatically open the door with just a wave of your hand. Stainless steel plate with built-in LED indicator to signal that the switch has been activated. 12VDC.
- 115(L) x 70(W) x 30(D)mm

WAS $44.95 $34.95
SAVE $10

ELECTRIC DOOR STRIKE LA5077

Upgrade your conventional door locks to keyless entry/electronic access. Suitable for narrower doors. Fail-secure model.
- 12VDC, 450mA
- 160(L) x 25(W) x 28(H)mm

$49.95

SINGLE CHANNEL KEYFOB REMOTE LR8847

Multi-purpose replacement remote control keyfob for garage doors or security gates. Single button control. 27MHz transmission.
- Requires 1 x A27 battery

FROM $4.95

RFID TAGS

CREDIT CARD STYLE	ZZ8952	$4.95
LANYARD TYPE	ZZ8953	$4.95
KEYFOB STYLE	ZZ8950	$5.95

WAS $24.95 $19.95
SAVE $5

BATTERY OPERATED PHONO PRE-AMP AC1649

A simple 9V battery powered pre-amp used for connecting products with magnetic pick-ups such as turntables to an amplifier.
- 2 RCA inputs and 2 RCA out
- 1 x 9V battery required
- 72(W) x 91(L) x 28(D)mm

WAS $49.95 $29.95
SAVE $20

MAST HEAD AMPLIFIER LT3276

Powerful boost to provide a quality free-to-air TV signal. Mounts on your antenna mast, powered by an inside power injector. Includes mounting hardware. Indoor/outdoor use.
- High gain amplification
- Full 1080p HD ready

WAS $64.95 $59.95
SAVE $5

USB2.0 DVD MAKER XC4867

Transform VHS/camera videos into high-quality digital recordings! Easily edit and burn to DVD. Windows™ compatible.

240WRMS Stereo Amplifier AA0520

WAS $249 $199
SAVE $50

Provides crisp audio power with two channels at 120WRMS each. Ideal for powering a second set of speakers elsewhere in your home or office. Dual line audio input. Remote control included.
- RCA input
- 6.5mm output
- 250(W) x 90(H) x 275(D)mm

WAS $89.95 $69.95
SAVE $20

VGA TO HDMI CONVERTER & UPSCALER AC1718

Ideal for devices with a VGA output (i.e older laptops) to display on a HDMI device. Also converts analogue audio source into HDMI digital stream. Plug and play.
- HDMI upscaling up to 1080p
- Analogue audio encoding
- 60(L) x 54(W) x 20(H)mm

WAS $149 $119
SAVE $30

4K UHD

COMPOSITE AUDIO VIDEO TO HDMI 2.0 4K UPSCALER CONVERTER AC1776

A universal converter for analogue composite input to HDMI 4Kx2K@60Hz output. Provide advanced signal processing with great precision, colours & resolution. No installation driver required.
- Inputs: 1 x RCA, 1 x S-Video, 1 x USB
- Output: 1 x HDMI
- 93(D) x 84(W) x 28(H)mm

WAS $149 $129
SAVE $20

2 X HDMI TO VGA/COMPONENT & ANALOGUE/ DIGITAL AUDIO CONVERTER AC1721

Connect HDMI signals from DVD, Blu-ray or set top boxes and output to VGA, component video, with digital (TOSLINK) or analogue (3.5mm stereo) audio outputs for connection to almost any TV or PC monitor. AC-1721
- HDCP support
- 128(W) x 34(H) x 94(D)mm

Garden Projects to Light Up Your Outdoors:

$4.95

SOIL MOISTURE SENSOR MODULE XC4604

Automate your garden with Arduino® and use this module to detect when your plants need watering.
- Analogue output
- Current less than 20mA

WAS $19.95 $14.95
SAVE $5

2 OUTLET 10A POWER GARDEN STAKE - IP44 MS4097

Versatile and safe way to distribute power in your garden. Spring loaded socket covers.
- Water resistant
- 1.8m cable length
- 395(H) x 147(W) x 70(D)mm

WAS $69.95 $49.95
SAVE $20

LED PROJECTION LIGHT SL3403

Light up your home or garden to get things into party mode! Extremely bright 4W RGB LED.
- Wave ripple effect
- IP65 waterproof
- 100(W) x 155(H) x 125(D)mm

WAS $79.95 $59.95
SAVE $20

OUTDOOR LED & LASER LIGHT COMBO SL3401

Red and green laser with a high power LED. Includes a mounting stand and garden spike, as well as a mains power adaptor.
- Remote control included
- 155(D) x 87(Dia)mm

TECH TALK:

LED Lighting:

Would you like brighter lighting without blowing the electricity bill? Then an LED (Light Emitting Diode) solution is what you need. LED lighting has revolutionised the way we produce light using silicon technology.

A 5W LED light typically gives off the same light lumens as a traditional halogen 50W light, which is a 90% saving in electricity and energy usage for the same (or better) lighting. LED lighting is environmentally friendly, and gives off less heat during operation (making it safer for use in tight locations).

A tiny LED module houses three light sources: Red, Green and Blue, and combined produce the full colour spectrum, with brilliant colour affects you typically see on Christmas trees, shop displays and flashing lights.

LED lighting can replace any legacy light bulb around your home or even your car head lights. In addition, LEDs come in strips that can be easily mounted along walls or cabinets or even wrapped around trees, to create amazing colourful lighting effects.

2 FOR DEALS! SAVE $$

2 FOR $29.90 SAVE $10

Use for your Laptop, TV, Wall etc

$19.95

USB POWERED TRIMMABLE RGB LED STRIP LIGHT - 1M ZD0571

Trim down to size to suit your application. Light mode, colour-change, and on/off controls via inline remote. IP67 weatherproof. 5-24VDC.

- 1m long USB cable
- 30 LEDs

2 FOR $59.90 SAVE $20

Ideal for vehicles, around the home, or in the workshop

$39.95

WATERPROOF LED FLEXIBLE STRIP LIGHT - 1M ZD0579

Fully encapsulated, waterproof & versatile. 1m version can be daisy chained for longer length. Submersible up to 1m. IP67 rated. 60 LEDs. 12VDC.

ALSO AVAILABLE:

5M ZD0576 **$79.95EA OR 2 FOR $119.90 SAVE $40**

2 FOR $79.90 SAVE $20

Great for under the bed

$49.95

MOTION ACTIVATED LED STRIP LIGHT - 1.5M ZD0588

Create nice bedroom mood lighting with this under bed light. Contains two long LED strips connected to motion sensors with 3m activation distance. Warm White. Mains powered.

- 2 x 90 LEDs.

2 FOR $79.90 SAVE $20

Display cabinets, under bench lighting, accent lighting, etc

$49.95 ea

FLEXIBLE ADHESIVE LED STRIP LIGHTS - 5M

Can be cut to size to suit your application. Two colour temperatures available. 12VDC.

- 300 LEDs

COOL WHITE ZD0575
WARM WHITE ZD0577

2 FOR $89.90 SAVE $30

Cabinet, Closet, Aquarium, Festive lighting

$59.95

RGB LED FLEXIBLE STRIP LIGHT - 5M SL3942

Totally flexible and self-adhesive strip. Allows you to change the colour to suit your mood, match your shoes, etc. Trim down to size to suit your application. Remote and mains power supply included.

- 150 LEDs

2 FOR $139.90 SAVE $40

Used in cinema foyers, nightclubs, casinos etc.

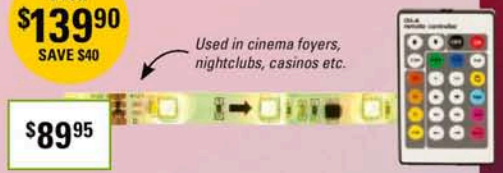

$89.95

RGB LED FLEXIBLE STRIP LIGHTING KIT WITH EFFECTS - 5M SL3954

An easy to setup RGB LED strip that can produce an array of dazzling effects. Used in cinema foyers, nightclubs, casinos etc. Includes 3M adhesive backing, power supply, remote control, and a joiner to connect LED strips together. 12VDC.

- 150 LEDs

LINKABLE ALUMINIUM LED STRIP LIGHTS - 12VDC

Suitable for caravan, marine, 4WD, auto and domestic applications. Connect multiple lights together with the included connectors to match your desired length and application.

48 LED 280 LUMENS ST3934 **WAS $24.95 NOW $19.95 SAVE $5**
84 LED 520 LUMENS ST3936 **WAS $39.95 NOW $29.95 SAVE $10**

FROM $19.95 SAVE UP TO $10

LED STRIP LIGHTS WITH SWITCH - 12VDC

Great for use on window displays, restaurant foyers, showrooms, hotels, and caravan or RV applications. Four mounting screws are included for fast and easy installation.

48 LED 280 LUMENS ST3930 **WAS $24.95 NOW $19.95 SAVE $5**
84 LED 620 LUMENS ST3932 **WAS $34.95 NOW $29.95 SAVE $5**

FROM $19.95 SAVE $5

LED ALUMINIUM STRIP LIGHT WITH SWITCH - 240VAC

Ideal for kitchen, under cabinets, book cases, bathroom lighting applications. Built-in switch. IP44 rated.

48 LED 650 LUMENS ST3946 **WAS $54.95 NOW $44.95 SAVE $10**
72 LED 950 LUMENS ST3948 **WAS $64.95 NOW $54.95 SAVE $10**

FROM $44.95 SAVE $10

WORKBENCH ESSENTIALS

There has been an obvious resurgence in people getting back to the workbench and reviving skills involving manual dexterity. As you will see across the following pages, Jaycar has all the DIY tools you'll need to equip your workbench so you can create projects from the power of your brain and your hands.

1. **LONG BIT SCREWDRIVER SET** TD2114
   - 22 pieces
   - Includes popular slotted, Phillips,Star and TRI bits
   - Storage case include
2. **300W HOT AIR REWORK STATION WITH LED DISPLAY** TS1645
   - Provide more uniform heat transfer and melt all solder pads at once
   - 100-500°C temperature range
   - Pushbutton / digital display
   - 160(L) x 113(W) x 123(D)mm
3. **1000A TRUE RMS AC/DC CLAMP METER** QM1634
   - Ultra-high current 1000A AC and DC measurement
   - Cat III, 6000 display count
   - AC/DC Voltage: 750V/1000V
   - AC/DC Current: 1000A/1000A
   - Carry case included
4. **LED HEADBAND MAGNIFIER** QM3511
   - Fits over prescription or safety glasses
   - Adjustable head strap
   - 1.5x, 3x, 8.5x or 10x magnification
   - Requires 2 x AAA batteries
5. **BENCHTOP WORK MAT** HMB100
   - Cut, solder, write on it and not damage your workplace
   - Durable
   - A3 size PVC
   - 450 x 300mm
6. **STORAGE CASE - 19 COMPARTMENT** HB6305
   - Made from sturdy ABS plastic with solid clasps
   - Removable compartment trays
   - Sizes:

   4 compartments: 55(L) x 40(W) x 50(D)mm
   8 compartments: 80(L) x 50(W) x 50(D)mm
   7 compartments: 110(L) x 80(W) x 50(D)mm

WAS $54.95
$39.95
SAVE $15

210 PIECE ROTARY TOOL KIT TD2459

Drill, cut, grind, polish, engrave or sand small components with ease.

- 32,000 RPM
- 1m long flexible shaft

WAS $159
$129
SAVE $30

PORTASOL® PRO PIEZO GAS SOLDERING KIT TS1328

- 120 minutes run time, 10 seconds fill, and 30 seconds heat up
- Maximum 580°C tip temperature (max 1300°C for built-in blow torch)
- Quality storage case

BUY TH2000 AND GET 30% OFF DIES TO SUIT

$39.95

QUICK CHANGE RATCHET CRIMP TOOL TH2000

- Heavy duty ergonomic crimper
- Interchangeable dies, no screwdriver required
- Ratchet mechanism designed for maximum power or quick release

$14.95

AUTOMOTIVE CRIMP TOOL WITH CONNECTORS TH1848

- Cut & strip wire, crimp connectors and also cut a range of metric bolts.
- Comes with 80 of the most popular automotive connectors

WAS $39.95
$34.95
SAVE $5

ELECTRONIC TOOL KIT TD2117

35 Piece. Multi-purpose precision screwdriver set with quality zipped storage case.

$39.95

HEATSHRINK PACK WITH GAS POWERED HEAT BLOWER TH1620

An assortment of 160 heatshrink tubes in 7 different colours and sizes, plus 1 gas powered heat gun with Piezo ignition and flame or flameless output.

WAS $34.95
$29.95
SAVE $5

42 PIECE ASSORTED SOLDER SPLICE HEATSHRINK PACK WH5668

Quickly create sealed soldered joint in one go.

$34.95

7 PIECE SCREWDRIVER SET TD2022

Durable, fully insulated screwdriver set for electrical work. 1kV insulation rating.

- Slotted sizes 2.5mm, 4mm, 5.5mm & 6.5mm
- Phillips sizes #0, #1, and #2

FROM $44.95

FOAM INSERT ALUMINIUM CASES

Ideal storage case for most equipment. Foam insert for complete protection. Lockable. Supplied with 2 keys.

SMALL 407 X 277 X 95 HB6355 **$44.95**

LARGE 450 X 320 X 145 HB6356 **$79.95**

EXCLUSIVE CLUB OFFERS:

FOR NERD PERKS CLUB MEMBERS

WE HAVE SPECIAL OFFERS EVERY MONTH. LOOK OUT FOR THESE TICKETS IN-STORE!
NOT A MEMBER? Visit www.jaycar.com.au/nerdperks

NERD PERKS CLUB OFFER

ONLY $179

0 TO 30VDC 0 TO 5A
REGULATED LAB POWER SUPPLY
MP3840

FREE DIGITAL MULIMETER QM1529* WORTH $24.95

**Valid with purchase of MP3840.*

NERD PERKS CLUB OFFER

ONLY $99

GAS SOLDERING & HEATSHRINK KIT
TS1115 **REG $129**
Excellent value and a handy kit for those quick and urgent repair.

SAVE $30

NERD PERKS CLUB OFFER

ONLY $9.95

250G FILAMENTS*
REG $15.95
1.75mm PLA Filament to suit 3D printers. Various colours available. TL4110 - TL4122
**Excludes Exotic Filament*

SAVE $6

NERD PERKS SAVE 40%

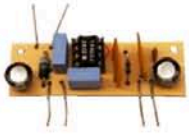

1W AUDIO AMPLIFIER MODULE KIT
KG9032 **REG $9.95 CLUB $5.95**
Quick Kit (circuit module only). 56(L) x 16(W)mm.

NERD PERKS SAVE 25%

6 WAY USB POWERBOARD
MS4068 **REG $39.95 CLUB $29.95**
240V. 6 USB Port.

NERD PERKS SAVE 10%

INLINE RCD CIRCUIT BREAKER
QP2002 **REG $34.95 CLUB $29.95**
10A. 240VAC.

NERD PERKS SAVE 15%

PROFESSIONAL BENCH ENCLOSURE
HB5556 **REG $59.95 CLUB $49.95**
Aluminium. Ventilation holes.

NERD PERKS SAVE 30%

10MM M3 TAPPED METAL SPACERS - PK100
HP0901 **REG $29.50 CLUB $19.50**
Nickel plated brass.

NERD PERKS SAVE 30%

CIGARETTE POWER SOCKET WITH DUAL USB PORTS PS2026 **REG $29.95 CLUB $19.95**
Marine Grade. 10A Cigarette Power Socket.

NERD PERKS HALF PRICE

GREENCAP CAPACITOR PACK - 60 PIECES
RG5199 **REG $11.95 CLUB $5.95**
From 0.001uF to 0.22uF, all 100V.

NERD PERKS SAVE 15%

33 DRAWER PARTS CABINET
HB6330 **REG $29.95 CLUB $24.95**
Free standing or wall mountable.

NERD PERKS SAVE 25%

433MHZ WIRELESS MODULES
ZW3100-02 **REG $13.95 EA CLUB $9.95 EA**
Pre-built transmitter/reciever. 10mA max.

NERD PERKS SAVE 20%

CORROSION BUSTER PEN
NA1410 **REG $24.95 CLUB $19.95**
120(L) x 14(D)mm.

NERD PERKS SAVE 25%

MODULAR DESIGN NEGATIVE BUS BAR
SZ2011 **REG $19.95 CLUB $14.95**
Transparent cover with recessed areas. LED indicator.

NERD PERKS SAVE 30%

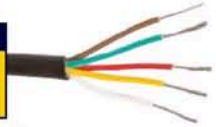

5 CORE TRAILER CABLE
WH3091 **REG $39.95 CLUB $27.95**
10m length sheathed in a tough black PVC jacket.

NERD PERKS CLUB MEMBERS RECEIVE:

20% OFF COMPUTER ADAPTORS*

**Applies to Jaycar 701B Computer Adaptors: Including D9, D15, D25 Gender Changes, USB A & B, Firewire, DVI adaptors.*

YOUR CLUB, YOUR PERKS:
NEW OFFERS EVERY MONTH
$1 = 1 POINT,
500 POINTS = $25 JAYCOINS GIFTCARD
Conditions apply. See website for T&Cs

NEW 2018

What's New:

We've hand picked just some of our latest new products. Enjoy!

TECH TALK: Bluetooth®

No more wires, with Bluetooth® wireless technology you are free to move around while streaming music to your headphones or speakers up to 10 metres away!

12" Rechargeable PA Speaker with Wireless Microphone CS2497

$249

Built-in amplifier and rechargeable battery perfect for parties, functions or karaoke nights. Play your music from a Bluetooth® source, USB flash drive, microSD card or auxiliary input.

- USB/microSD Playback & Recording
- FM Radio
- RGB LED Light
- Extendable trolley handle & wheels
- 350(W) x 630(H) x 325(D)mm

Bluetooth®

NOISE CANCELLING HEADPHONES WITH BLUETOOTH TECHNOLOGY AA2131

Crystal clear dynamic sound with strong deep bass reproduction. Built-in rechargeable battery provides continuous playback up to 14 hours. 3.5mm Auxiliary Jack.

- Built-in Microphone
- Built-in controls

Bluetooth®

$129

$19.95

5-IN-1 UNIVERSAL MEDIA PLAYER TV MOUNT CW2844

Mount your media players, streaming boxes, mini PCs, Miracast dongles or hard drives onto the back of your TV or wall bracket.

- Mounting options: VESA, TV wall bracket, screw, 3M adhesive and hanging mounts

$79.95

PC MONITOR HANGING CUBICLE BRACKET CW2834

Suits monitors up to 27" with a standard VESA mount. Features 360° rotation, 15° tilt and a cable management clip to keep your cables tidy. Adjustable hang height for optimal positioning. Mounting hardware included.

- Monitor Size: 13-27" (33-69cm)
- 120(W) x 330(H) x 99(D)mm

$29.95

USB TYPE-C TO 3.5MM AUDIO CABLE WC7932

Quick and easy audio output option for your USB Type-C enabled device.

- Connects to audio input on speakers or other equipment
- 1m length

$29.95

8 PORT 10/100MBPS ETHERNET SWITCH YN8388

Provides 8 additional ports to an internet router, firewall, or a standalone network. Plug-and-play installation and low power consumption.

FROM $8.95

AUTOMATIC LED NIGHT LIGHT WITH SENSOR

Automatically switches on and off based on ambient light. Mains powered. Plug and play.

- SAA approved

2 LUMEN SL3530 **$8.95**

8 LUMEN SL3531 **$9.95**

$59.95

WIRELESS AIR MOUSE REMOTE WITH VOICE ASSIST AR1976

Replaces the traditional remote control. Air-mouse operation to use like a PC mouse but waving in the air or use the full Qwerty keyboard. Compatible with YouTube, voice search & Skype. 2.4GHz USB dongle included.

50M 1080P MINI HDMI CAT5E/6 EXTENDER AC1726

$79.95

Run your full 1080p HDMI signal up to 50m away. Uses Power-Over-Cable (PoC) technology so it receives its power from the transmitter using the Cat5e/Cat6 ethernet cable.

- 50m (Cat6), 40m (Cat5e) Transmission range
- HDCP & 3D support

Cat6 cable recommended for longer distance.

TERMS AND CONDITIONS: REWARDS / NERD PERKS CARD HOLDERS FREE GIFT, % SAVING DEALS, DOUBLE POINTS & MEMBERS OFFERS requires ACTIVE Jaycar Rewards / Nerd Perks Card membership at time of purchase. Refer to website for Rewards/ Nerd Perks Card T&Cs. PAGE 1: TL4250 & TL4256 FREE delivery applies to standard/road freight, see website for details. PAGE 2: Nerd Perks Card Holders receive a special price of $49.95 for Christmas Cards with LED Lights Project kit when purchased as bundle (1 x KJ9330 + 4 x SB2522). PAGE 3: Nerd Perks Card Holders receive a special price of $29.95 for Strobing Christmas Star Project kit when purchased as bundle (1 x ZL3555 + 1 x RE6066 + 1 x RR2774 + 1 x RP7510 + 1 x HP9556 + 1 x MP3145 + 1 x PS0519 + 10 x SL2674 + 1 x ZC4017 + 5 x ZT2115 + 5 x ZT2110). PAGE 6: FREE Butane Gas (NA1020) with every purchased of TH1620 Heatshrink Pack with Gas Powered Heat Blower. Buy TH2000 Ratchet Crimp Tool and get 30% OFF Dies to suit (TH2001, TH2002, TH2003, TH2004, TH2005, TH2006, TH2007, TH2008, TH2009, TH2010 & TH2011). PAGE 7: Nerd Perks Card holders receive FREE Digital Multimeter (QM1529) with every purchased of MP3840 Lab Power Supply. Nerd Perks Card Holders receive a Special discount on Gas Soldering & Heatshrink Kit (TS1115). Nerd Perks Card Holders receive special discount on 250g Filaments applies to TL4110, TL4112, TL4114, TL4116, TL4118, TL4120 & TL4122. Nerd Perks Card Holders receives 20% OFF Computer Adaptors: Applies to Jaycar 701B: Computer Adaptors.

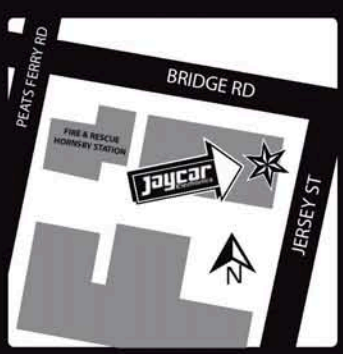

JAYCAR: HORNSBY
1/67 Jersey St, Hornsby NSW 2077
PH: (02) 9476 6221

FOR YOUR NEAREST STORE & OPENING HOURS:

1800 022 888

www.jaycar.com.au

99 STORES & OVER 140 STOCKISTS NATIONWIDE

Jaycar Electronics

Head Office
320 Victoria Road,
Rydalmere NSW 2116
Ph: (02) 8832 3100
Fax: (02) 8832 3169

Online Orders
www.jaycar.com.au
techstore@jaycar.com.au

Arrival dates of new products in this flyer were confirmed at the time of print but delays sometimes occur. Please ring your local store to check stock details. Occasionally there are discontinued items advertised on a special / lower price in this promotional flyer that has limited to nil stock in certain stores, including Jaycar Authorised Stockist. These stores may not have stock of these items and can not order or transfer stock. Savings off Original RRP. Prices and special offers are valid from Catalogue Sale 24 November - 26 December, 2018.

Some people are just IMPOSSIBLE to buy Christmas gifts for!

You know the problem: you want to give a Christmas Gift that will really be appreciated . . . but what to give this Christmas?

Problem Solved!

Give them the Christmas Gift that KEEPS ON GIVING – month after month after month:

A GIFT SUBSCRIPTION to SILICON CHIP

For the technical person in your life, from beginner and student through to the advanced hobbyist, technician, engineer and even PhD, they will really appreciate getting their own copy of ***SILICON CHIP*** every month in the mail.

They're happy because they don't have to queue at the newsagent each month. You're happy because it actually costs less to subscribe than buying it each month.

- *CHOOSE FROM 6, 12 OR 24 month subscriptions*
- *Start whenever you like (Jan-Dec is very popular!)*
- *Order before Monday, December 10 and we'll even send them a card to let them know that you've thought of them!*

Ordering your gift subscription is easy!

To Place Your Order:	ONLINE (24/7)	OR	PHONE (9-5, Mon-Fri)	OR	PAYPAL (24/7)	OR	eMAIL (24/7)	OR	MAIL
	Log onto *siliconchip.com.au* click on [subscriptions] and fill in the details!		Call (02) 9939 3295 with your order (including credit card details) – and tell us who the gift is for!		Use PayPal to pay *silicon@siliconchip.com.au* Don't forget to include all details!		*silicon@siliconchip.com.au* with order & credit card details include your contact info!		All order details – including credit card details & contact no to PO Box 139, Collaroy NSW 2097

CHRISTMAS IS ONLY 4 WEEKS AWAY!

SERVICEMAN'S LOG

Travelling makes me go cuckoo

Dave Thompson*

Finally back from a long trip overseas, I had the expectation of a holiday from my holiday, but it wasn't to be. One of the tacky souvenirs I brought back as a gift was faulty and of course it needed someone to fix it. While most people would throw it away, this was a gift and so I couldn't help myself and went straight to work.

Items Covered This Month

- Fixing a cuckoo clock
- Vintage army computer repair
- Westminster chimes in Oz

*Dave Thompson runs PC Anytime in Christchurch, NZ.
Website: www.pcanytime.co.nz
Email: dave@pcanytime.co.nz

On slow days, most of us day-dream of relaxing in some exotic location, with nothing better to do but to chill in the sun and sample the local delights.

Unfortunately, modern travel has put a wet blanket on those dreams for me. After far too many hours standing in queues, lounging about in airports the size of small cities waiting for connecting flights and being crammed into aeroplanes packed to the winglets with irritable travellers, we couldn't wait to get to where we were going – whether far away or back home.

I've concluded that this baggage-class travel lark is for other people; next time it will be business class or bust!

In theory, technology exists to make life better but I saw plenty of evidence to the contrary on my trip. For example, those body scanners at airports. Not only are they personally invasive but they are actually slower than the traditional pat down and metal-detector approach!

On the way out, all the women passengers were diverted from the queue into and through the scanner, and on the way back, all the men were. For those who haven't had the pleasure, you walk into a large, walk-in wardrobe-sized metal and glass booth, plant your feet on two painted footprints on the floor and hold your hands up as if surrendering – which of course, you are.

A back-and-front scanner laterally rotates around 180° and back before an image is displayed for the perennially grumpy operator to view. (Wouldn't you be grumpy too if your job was to stare at images of tired travellers' saggy appendages all day?)

While there is a display outside the booth that the passenger can view on stepping out, the security person barked out orders for me to move forward so sharply that I didn't have a chance to see what it looked like before I got a full pat-down anyway. So what's the point of these scanners?

For another example, smartphones are everywhere now. In many parts of Europe, you can pay for parking, petrol, souvenirs, groceries or pretty much anything else just by using an app, texting a number or holding your phone near a terminal.

In the airport, you can use smartphones to display online boarding passes at express check-in terminals and to pass through the departure and boarding gates. The express check-in is great, and a real time-saver, unless (like us) you have bags you can barely lift that need to be checked in manually.

However, using the phone for boarding takes longer than when the ground crew check each boarding pass the old-fashioned way, so where's the benefit here to the weary traveller?

On more than one occasion, a passenger couldn't get the phone to wake up or the scanner to read it correctly, holding up those waiting to board even more. Progress? I'm not so sure.

Enough grumbling. . . for now

Anyway, after two gruelling days of travel, we were happy to be home,

WE BROUGHT BACK A SMALL & VERY CHEAP & NASTY CUCKOO CLOCK . . .

and then came all the unpacking. We'd brought a few souvenirs with us for friends and family, as one does, and we'd packed them very carefully to prevent them from being damaged.

YouTube is full of videos of baggage-handling staff at airports around the globe casually kicking or dropping suitcases 15 metres to the ground, or chucking bags from the hold onto the trolleys – and sometimes missing. I have no doubt that most airport workers are diligent but even with our hard-shell cases, we suffered some damage.

It's annoying but there it is; we knew the risks. It is even more annoying when you unpack something you purchased for someone else, only to find it doesn't actually work.

We have an informal but long-standing competition with one couple we know to bring back the cheesiest souvenir for each other from whatever country either of us goes to. In this case, we brought back a small and very cheap and nasty souvenir cuckoo clock purchased from a tacky tourist shop at a famous beer hall in Munich.

This is ostensibly a miniature representation of one of the many cathedrals dotted around southern Germany that boast a "glockenspiel", a mechanical automaton-style display built into the clock tower that comes to life on the hour, every hour and performs sometimes-complex routines in time with pealing and tolling bells.

We saw quite a few of these displays from tourist-packed town squares, but none we saw resembled this souvenir version, which includes a tiny, watch-sized working clock movement and a pendulum underneath that swings back and forward – or at least, is supposed to.

It all looked fine from the outside, but when I opened the flimsy cardboard box and inserted the two hearing-aid style batteries that came with it, nothing much happened.

The second hand did advance as expected and the clock ticked away as cheap movements often do, but after 10 minutes, the hour and minute hands hadn't moved at all and the pendulum stayed stubbornly on one side, no matter how much I helped it to swing.

We couldn't give this thing away like it was; no matter how cheap and cheesy it is, it should at least work. I had to try to get it going.

But how can one rationalise spending any real time on fixing a $10 trinket? The Serviceman's Curse strikes again, of course!

Delving into the clock

Working on it was a bit of a challenge because it is small and oddly-shaped and there is no flat face at the front on which to lie it down, so I sat it on a sponge.

The back half is just a plastic frame but the main body of it is sculpted, painted plaster with tiny figures inside it, making it relatively fragile. So I'd have to be careful handling it during the repair.

There are four small neodymium magnets set into the rear moulding to hold it to a fridge. These are mounted on the rear corners of the plastic housing. Inside this plastic frame, I could see the clear plastic case of the actual clock mechanism, a very typical cheap movement likely manufactured by the millions in some Chinese factory.

Getting to it meant breaking the glue holding the magnet housing to the plaster body and this was achieved with the aid of a craft-knife blade and a little force. With that housing out of the way, I had access to the four tiny screws that held the clock movement together.

The time-adjusting handle stuck out from the back of this housing and for those wondering, I'd already played around with that in order to get the hands moving.

While I could manipulate the hands with the adjuster, they wouldn't move under their own steam. It is one of those systems where you pull on the adjuster to engage it and twist it either way to move the hands forward or back, to the correct time.

My thinking was that perhaps the adjustment mechanism wasn't clearing the gears when pushed back in and thus preventing them from moving. No such luck; even after twiddling the adjuster through the entire range, there was no hand movement at all. The second hand still ticked away happily but the time never advanced.

As I had to remove the plastic frame first, and this housed the pendulum assembly, I decided to check that next. The pendulum appeared to be moved by some type of electromagnetic system, an elaborate set-up for such a cheap device.

The pendulum is simply a painted, heart-shaped plaster weight moulded to a short length of silver wire, pivoting at the very top of the plastic frame and running through a plastic "C" core which must house coils of wire used to create the alternating magnetic field.

The problem was that the pendulum was very stiff, so it stayed where it was no matter where in the stroke I put it. I soon saw the problem; the injection-moulded plastic 'bearing' the pendulum pivoted on had come out of its housing and was sitting slightly askew.

I tried to pop it back in, but it kept falling back into the misaligned position. I used a bit of pressure to spread the plastic housing apart and removed the pendulum assembly entirely from its mounts and had a closer look at the pivots.

Either it hadn't been made properly during manufacture, or it had suffered a catastrophic event in transit, because one of the tiny pivot pins had mashed to one side and when I attempted to straighten it, it broke off completely. Excellent! This plastic pin looked to be about half a millimetre in diameter and about 1.5mm long, so replacing it would be tricky.

However, I've worked on smaller stuff before, so it was out with the microscope and dad's old box of teeny-weeny drills. I was fortunate to inherit these drills and blanks when dad broke down his workshop.

Repairs in miniature

He'd sourced them when he was making miniature jet engines for model aircraft, using modified car turbochargers for impellers because the bearings could cope with the expected 100,000 RPM shaft speeds.

He'd needed to make tiny fuel tubes, mostly from (if memory serves) 1-2mm diameter brass or copper pipes, which I think he also made. He'd needed these drills to bore a series of holes along the sides of the tube; a tricky task for any engineer, but he managed to do it.

As different sized holes would change the engine's performance, he drilled many holes in many tubes and did a lot of experimenting. He'd needed many different-sized drills for this task and had kept a lot of the blanks from having the drills made.

These drills were really tiny, some so small you couldn't even make out the flutes until you got them under a good magnifying glass. They make my Jaycar set of PCB drills look like monsters!

I broke out my micrometer and found one the same diameter as the remaining plastic pivot pin (0.45mm diameter) and after trimming off the remainder of the old, damaged pin and squaring off the surface with a craft knife, I used a pin vice with my smallest chuck to manually drill the hole where the old pin was.

After going into the plastic block as far as I dared (probably only a couple of millimetres), I simply cut the drill off using a pair of old side-cutters, forming a new pivot pin. I used a Dremel and a small cutting disc to very carefully round off the sharp end of the cut drill, barely touching it to avoid heating it.

When done, I re-assembled the pendulum into the housing and tried it; it now sat square and freely moved back and forth. Hopefully, the clock mechanism would be as easily fixed.

Onto the next job

I removed the four tiny screws that held the back of the clock on and it came off with the adjuster handle mounted in it. A simple spring arrangement holds the adjuster clear of the clock's gears until pulled out to move the hands. As mentioned, while the hands do move when adjusted using this method, they just won't move any other way.

My guess is there must be something not making proper contact somewhere in the movement's gearbox; a gear must have slipped out of position or something like that.

The clock movement is a simple quartz type, with a tiny stepper motor and a small gear train that moves the hands. The gears appear to be injection-moulded Nylon, and reasonably well-made; that is, they are clean and clearly defined, unlike many cheap injection-moulded parts.

Individually, they all seem to move without binding, as demonstrated by being able to adjust the hands manually, but the problem of why the hands didn't move became evident when I dug in further.

One gear near the start of the train had several teeth missing, perhaps faulty from manufacture or more likely eaten off due to the clock running with the hands stuck or the adjuster preventing gear movement.

When I advanced the gear to where there were some teeth, the hands moved as expected, but soon stopped again when the gear came around again.

This was the worst-case scenario, as while I have a parts bin full of gears and small cogs recovered from old clocks, printers, scanners, video recorders and various other contraptions over the years, I had nothing remotely like this gear in there. To repair this clock, I'd either need another suitable clock mechanism to replace this one, or a 3D printer and a plan of the gear; none of which I have.

I hate being beaten by anything, let alone something as seemingly insignificant as this but it happens all the time, at least in my serviceman's world; perhaps I should have paid more attention at school.

There are always jobs where I discover there are no circuits or parts available, or the manufacturer has intentionally obfuscated components, making them next-to-impossible to identify and replace, yet every time it happens it is still a bitter pill to swallow.

There is nothing worse than a run of jobs that don't have positive outcomes, and it transpires that this one will stay broken as well. It's a shame that after all this we can't give it to our friends, so after gluing it back together, it now hangs on our fridge. We had to give them another cheesy souvenir that we had (luckily) also purchased when overseas.

At least the clock sounds like it is working and the pendulum goes back and forth. That is a fix that I am quite proud of. I'll take the win no matter how ridiculous it was to do it.

Even though the clock doesn't work, at least it shows the correct time twice a day!

Military computer repair

These days, if you have a problem with your computer hardware, there are all sorts of diagnostic tools to help you figure out what is wrong.

That wasn't true back in the 70s though; most computers were too expensive and specialised. G. C., of Briar Hill, worked for the Australian Army when he ran into the dreaded intermittent fault with a computer they were evaluating...

In the late 1960s, the Australian Army was investigating the possibility of using a computer system to quickly and accurately calculate the angles required to aim artillery guns.

A "paper evaluation" concluded that a British Army computer had features more suitable for the Australian Army than those of a similar computer used by the American Army.

So an arrangement was made for one of the British computers to be evaluated by the Australian Army.

Rather than sending out a British Army technician to look after the computer while it was in Australia, it was cheaper to send an Australian Army technician to England, to be trained on the equipment.

I believe the arrangement was between the Australian Government and the manufacturer, Elliott Automation; the system that came to Australia didn't belong to the British Army.

In 1969, I was selected to go to England to do the three-month course on

the maintenance of the Field Artillery Computer Equipment (FACE) at the British Army's School of Electrical and Mechanical Engineering (SEME).

The equipment, along with diagnostic equipment and many spare parts, arrived in Australia in 1970. I then became intimately associated with the system, working with it for more than a year.

The system comprised six major pieces with many interconnecting cables. These pieces were: the operator's console, the computer, a program loading unit, a teleprinter, a DC-to-AC inverter (to power the commercial teleprinter) and a power distribution module.

Due to the short length of one specific cable, the computer was mounted upside-down on the trolley which was built to hold the lot.

A team of Australian Army Artillery personnel had been trained in the use of the system and it was then taken all around Australia, to various Artillery units, to show it off and to have its usefulness evaluated. I went along with the system, to make sure it kept working.

It worked flawlessly for about six months, then it developed an intermittent fault.

The fault showed up as an error code displayed on the console and the code (9000 from memory) indicated that it was a fault in the computer, but not what the fault was.

The computer was an Elliott 920B, which was a lighter weight but ruggedised version of their 920A computer. This was used, among other purposes, to control traffic lights.

As I had been trained on the test equipment, I figured that I could easily find the fault. The main piece of diagnostic equipment was the computer test set.

All I had to do was undo some of the cables going to the computer module, connect other cables to the computer test set and start the test.

A slight hiccup: some of the points the test set needed to monitor didn't appear on any of the pins of any of the external sockets of the computer, so it had to be opened up and two smaller cables then connected to the internal points. Simple, except that there was the main cover to be removed then an internal electromagnetic shield.

The cover was no problem, only 20 large screws to undo. The shield, though, had 64 screws holding it in place. And this was in the days before we had electric screwdrivers. It took about half an hour just to get the test set connected.

Once the cover and shield were removed, two printed electronic circuit (PEC) cards had to be pulled out and re-installed using extender PECs. The two smaller cables were then connected to sockets on the extender PECs.

The testing with the computer test set was all logical; it tested computer functions (circuits), in a specific order, and then used the tested functions to extend the testing.

It had many rotary switches and these had to be switched in specific sequences. At each step I compared the results, shown on nixie tubes, to values in a table in the repair manual. The complete test took about an hour.

The first time I did this test to find what the 9000 error code was actually about, the test set indicated that no fault was found. I reckon that I repeated the test about six times and it didn't find any problems.

I disconnected the test set, put the shield and cover back on and re-connected the system. Everything worked correctly; no error code appeared on the console.

The system worked for another month or so, then it did it again. I repeated the test and still, no fault showed up. This happened once or twice again and each time, some sequence in the testing seemed to clear the fault before it could be detected.

Then the fault started to occur more regularly and I was getting a "bit of stick" from the operators for not being able to fix the equipment.

I was beginning to think it was a heat related problem, and that by opening the computer up, the cooling cured the problem. To prove this, when the error code next appeared, I closed the system down and left it overnight to cool down.

The photo above shows the teleprinter at left and operator's console being used, with a labelled diagram at right. This computer used a ferrite core system for memory with a total capacity of 147,456-bits. Refer back to the article in SILICON CHIP, March 2014, for an explanation of core memory (siliconchip.com.au/Article/6937).

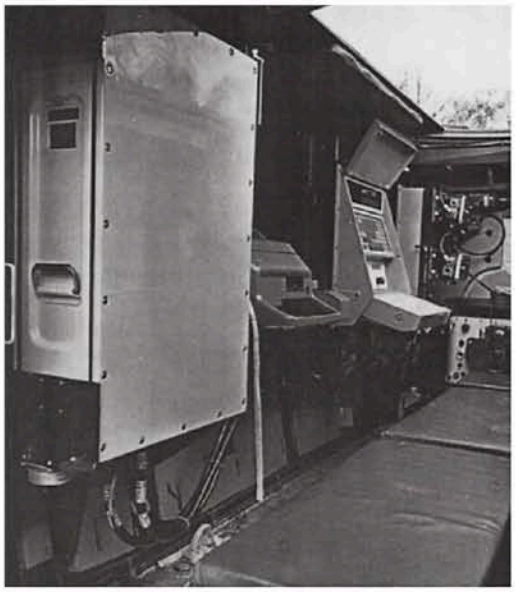

The Field Artillery Computer Equipment, with the Elliott 920B in the foreground.

The next morning, the error code showed up immediately the system was switched on. Only running the test sequence cleared the problem.

So, I tried to overheat the system to get the unit to fail completely. With the computer opened and the test set hooked up, I had a vertical bank of two-bar electric radiators pouring heat into the computer; still, it didn't miss a beat on the test set.

Finally, the error stayed and going through the test sequences with the test set didn't cure it. But worse, the test set didn't identify what the problem was.

I got permission from the Australian agents of Elliott Automation to contact their head office, in Britain, directly. The quickest way to make contact, in 1970, was to use the Defence messaging system. This was a teletype system.

Elliott Automation had a British Army message centre on their premises, so I could compose a message directly to them.

I would write out what the problem was and what I had done and submit the message to an Australian Army message centre. They typed it up on their teletype system and sent it over the submarine cable to Britain.

Due to the time difference, I usually had an answer back when I got to work the next day. This was kept up for about a week, with their engineer telling me what to try next.

I'd write up the results I'd found in another message before leaving work for the day and have a reply by the next morning. Most of their suggestions involved exchanging various PECs in the computer with a spare.

The people at Elliott Automation must have sensed that this slight problem may be about to put the kybosh on the sale of the FACE systems to the Australian Army.

The engineer asked me, by message, did I have a home telephone that he could call me on? No, I didn't, and the Army unit where I worked had closed for the day by the time the engineer was at work in England, so I couldn't stay back to talk to him. What I did have, though, were parents-in-law who had a home telephone.

I arranged for the engineer to call their number at about 8:00pm Australian time and I'd be there to talk to him. This we did for about three days and nothing he could think of worked. "I'm coming out," he said, and he was there in Sydney in about three days.

He observed the fault first hand and stepped through the test procedure, many times, getting the same result as I had. The test set was not finding the fault. His analysis was that it was a fault in the computer memory. This was the only item for which a spare hadn't been sent out with the system.

The computer memory was a ferrite core system, with 147,456 ferrite doughnuts being the storage medium. Its capacity was 8192 18-bit "words".

The engineer then brought out the "big gun" from his luggage, a computer programming keyboard. We hooked it up directly to the computer; the keyboard had its own display. Because I had been taught the computer "language", its instruction set, on the course that I had attended, he told me to write a program to test each bit of each word of the memory.

So, I tried writing all 1s to each bit and reading the bit back straight away. All good. Then I tried all 0s, still good. Then he suggested a chequer-board pattern, writing "10101..." (18 bits) to a location and test it straight away, then, if good, write "01010..." to the same location, read it back and, if good, go on to the next location.

Well, that did it! Finally, the fault showed up as one bit that didn't change to the appropriate magnetic state when it was being programmed. The fast changing of the magnetic state of that one ferrite core with the chequer-board program identified the problem. The computer test set didn't perform such a test.

A hasty message was sent back to Elliott Automation and a new memory unit was dispatched and it was in Sydney within a week. "These memory units never fail, that's why there was no spare sent out with the equipment," the engineer told me, "they are ultra-reliable."

They were also very expensive. The cost of all the other spare parts sent with the computer was insignificant as compared to the cost of one ferrite core memory unit.

The evaluation of the FACE system continued, once the new memory unit was installed, and the Army went on to buy many of these systems.

A representative of Elliott Automation told me later that the ferrite core in the memory unit that failed had a microscopic crack through it.

Westminster chime clock repair

J. H., of Nathan, Qld, ran into his own clock problems, with a custom part being faulty. However, his story turned out better than expected...

As children growing up in the 40s, both my wife and I lived in households which had a Westminster chimes mantle clock. So as a special gift for my wife's birthday I presented her with a Napoleon's Hat Westminster Chimes clock. The clock has given wonderful performances for twenty years. The quartz movement gains so little time that the clock does not need resetting between battery changes.

However, just recently, the clock lost its chime function and because of the sentimental value attached to this clock, I thought I should try to repair it.

The clock consists of two sections – the quartz movement powered by a 1.5V alkaline cell and the chimes section, independently powered by

Servicing Stories Wanted

Do you have any good servicing stories that you would like to share in The Serviceman column? If so, why not send those stories in to us?

We pay for all contributions published but please note that your material must be original. Send your contribution by email to: editor@siliconchip.com.au

Please be sure to include your full name and address details.

two 1.5V alkaline cells in series. Two wires run from the movement to the chimes section and, on the hour, the movement shorts these two wires which then triggers the chimes section to start the hourly chiming and tolling sequence.

The faulty chimes unit consists of an epoxy-encapsulated IC about the size of a 10¢ coin which drives a tiny 4cm speaker.

The speaker tested OK but there was no way that the epoxy covered IC could be repaired. An internet search for a possible replacement revealed that they cost about $US30, with about as much again for postage.

One clock company in the USA had a replacement for about $US8 but the postage was a secret. I emailed them three times for the total cost including postage but never once received a reply.

Determined not to be beaten, I had to fall back on my own resources to effect a repair. Surely, I thought, it wouldn't be too hard to get a microprocessor to play the simple Westminster Chimes tune and then add the appropriate number of tolls. There are only four or five notes involved.

I had some older mark 1 Micromites on hand so I used one of the pulse width modulation (PWM) outputs to generate the required frequencies and experimented with the duration and pausing between notes until I had a respectable melody.

I used the two wires from the movement signalling the hour to wake the microprocessor from sleep mode, whereupon it would play the chime and toll and then go back to sleep. For good battery life, not only did I use sleep mode but I also set the CPU to run at its slowest possible speed. Also, I set the chimes to cease at 10pm and resume at 7am – as much as I like a chiming clock, the friendship ceases at 10pm.

The new circuit was able to fit (just) into the space vacated by the original IC and as I assembled the clock, I thought I had solved the problem. But it was not to be. After a few hours listening to the chimes, I realised they weren't Westminster chimes at all! Where were the bells? The square wave PWM output was just so mechanical and un-musical.

Well, I thought, maybe I could make the sound more interesting by adding a second PWM channel with a note separation of about 8Hz from the first to create a vibrato effect on the note. This did make the sound more interesting but it still sounded like the Westminster Chimes played on bagpipes!

So I put the clock back together again with its bagpipe sound but I knew this wasn't the end. Maybe I would get a reply on that unit from the USA?

It was sometime later that I came across the DFPlayer Mini. This device is a 16-pin miniature MP3 player module measuring about 20 x 20mm. With its own 3W audio output stage, it can be configured to play MP3 tracks stored on a microSD card either by a set of momentary contact switches or by commands sent from a microcontroller via a serial port (see the El Cheapo Modules article on page 74 for details on this module).

I had already seen websites from which the full set of Westminster chimes could be downloaded in MP3 format. I had played some of these on my computer and they sounded impressive. So here was the solution to my problem. A ménage à trois of the DFPlayer, a set of MP3 chimes on an SD card and a Micromite.

It took four weeks for the DFPlayer Mini to arrive from China but in that time, I was able to build a circuit on Veroboard, ready for the module to be dropped in.

I also prepared and tested a suitable program for the Micromite. The original clock only chimed on the hour but not on the half or quarter hours. As mentioned previously, the hourly chime was synchronised by the two leads from the clock being shorted together.

But now that I had a full set of chimes, I decided to make my program incorporate the half and quarter hour chimes also.

The hour chime is fully synchronised to the quartz clock but the half and quarter chimes would have to rely on the Micromite's internal clock. As the Micromite's internal clock is not very accurate over the long term, it is reset by the program to correct time on the hour as determined by the quartz clock.

The DFPlayer finally arrived and all was ready to go when disaster struck! As I was unsoldering the previous set of leads from the clock's tiny loudspeaker, to connect it to the DFPlayer outputs, the loudspeaker's terminal connection pad completely separated from the frame.

A quick examination of the fine leads going to the loudspeakers coil verified that repair would be impossible. I had some small 6cm speakers salvaged from old computers but they were too big for the allocated space in the clock. So to test the new chimes circuit, I pressed into service a larger 12cm speaker. This speaker is the type usually seen in a car's audio system on the rear parcel shelf.

And what a surprise – with this new bigger and better speaker the clock sounded like Big Ben itself! It wasn't a disaster after all. I decided to mount the speaker on the rear of the clock – it just fitted neatly but I would now have to remove it every time the clock's battery needed changing.

Also, the power requirements meant that the chimes could no longer be powered from a 3V battery source. I had to use a 5V plugpack supply instead. But this was a small price to pay for such a fantastic outcome. Gone are the tinny sounding chimes and gone is the bagpipe wielding Scotsman. SC

CHRISTMAS SHOWCASE

PicoKit

CHRISTMAS STAR – Special offer for SILICON CHIP readers.

Looking for something different this Christmas? How about this build-it-yourself musical Christmas Star from PICOKIT?

Supplied with a pre-programmed PIC12F50 which not only controls the LED chaser pattern, it also has five popular Christmas carols which play in sequence and in sync with the 20 ultrabright wide-angle LEDs. It can even be controlled by motion with infrared motion detection.

Normally great value at $24.20, for a limited time SILICON CHIP readers will pay only $18.70 – a 22% saving!

You'll find more information on the PICOKIT STAR on the PICOKIT website (see below)

PicoKit - Maker Space Solutions
Upper Caboolture 4510, QLD
Phone: 07 5330 3095
www.picokit.com.au

Anritsu

MS46121B Compact 1-Port USB Vector Network Analyzer

The MS46121B is a series of two PC-controlled 1-Port USB ShockLine Vector Network Analyzers with frequency ranges of 40MHz to 4GHz and 150kHz to 6GHz. The MS46121B provides performance and accuracy for your one port measurements in a low cost and space saving solution that is small enough to directly connect to the device under test. All the members of the MS46121B series are aimed at RF and microwave applications in manufacturing, engineering and education. The two MS46121B options both come with 120 microsecond per point sweep speeds and a measurement accuracy of ±0.5dB (-6dB offset, typical), making them suitable for your passive device test applications.

These new very compact VNAs are externally controlled via USB from a user supplied PC. Up to 16 independent MS46121B VNAs can be operated in parallel from the same computer running ShockLine software. This enables true parallel multisite testing of 1-port devices improving throughput over traditional single VNA and switch matrix test solutions.

Anritsu

Web: www.anritsu.com/en-AU
Email: AU-sales@anritsu.com

The Aussie-made modular hearing aid is sweeping up awards

You might remember Ross Tester's review of Facett, the modular hearing aid by Blamey Saunders Hears, from the April edition of SILICON CHIP.

Ross said, "The construction and battery connection is highly innovative. And they look pretty fancy too…"

Since that review, Facett has received 12 awards for innovation and design, including the prestigious Australian Good Design of the Year Award and the CSIRO Design Innovation Award.

Facett solves big issues preventing people from using hearing aids - cost, stigma, and usability. Here are a few reasons it's winning awards:

It's made for easy handling

Facett uses silver-zinc rechargeable batteries housed in disconnectable modules which attach instantly, magnetically, to the hearing aid core (DSP).

It enables affordable upgradability

Instead of buying a new hearing aid model, Facett users can access new features by buying add-on modules that work with the original core.

It's user-programmable

The award winning IHearYou® app lets users control their listening preferences and program the hearing aid themselves, on a smartphone, tablet or computer, with the same software used in clinic by Audiologists.

For more, visit facett.com.au

$AVE $20

Part No. IMG6021

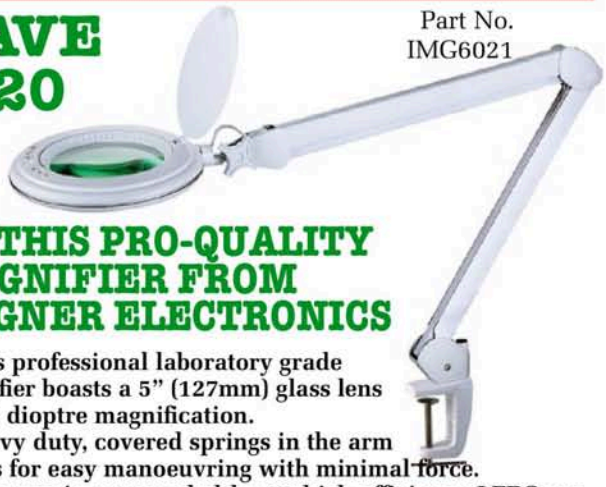

ON THIS PRO-QUALITY MAGNIFIER FROM WAGNER ELECTRONICS

This professional laboratory grade magnifier boasts a 5" (127mm) glass lens with 3 dioptre magnification.

Heavy duty, covered springs in the arm allows for easy manoeuvring with minimal force.

The mag is surrounded by 60 high efficiency LEDS producing a maximum output of 850lm. What makes this magnifier unique is that the colour temperature of the LEDs are adjustable from 3500K to 6500K allowing the user to adjust the output to suit the environment or product being viewed.

Supplied with a heavy duty clamp which allows the magnifier to be attached to a desk and a mains power supply is included

RRP is $139.00 – however as an introductory special, for a limited time only the price has been reduced to $119.00.

Wagner Electronics
84-90 Parramatta Rd, Summer Hill, NSW 2130.
WEB: WAGNERONLINE.COM.AU Phone: (02) 9798 9233

CHRISTMAS SHOWCASE

PHILIPS

43" 4K HDR1000 Brilliance Monitor

These days computer monitors are about more than just computers.

With 4K resolutions, multiple HDMI connections & remote controls they can be used to display almost any content from game consoles to Chromecasts.

This Christmas Philips have paired a huge 43" 4K panel with HDR1000 capability to deliver the ultimate versatile display.

Finish your spreadsheets and then fire up the Netflix before strapping in for a night of hard-core gaming.

You can do it all on them Philips 43" 4K HDR1000 Monitor.

Right now get a $100 Cash Back on this model available for a street price of around $1400

Launch of the Alternative to Dow Corning's CN-8760 Encapsulant

Electrolube, global electro-chemicals manufacturer has recently formulated and launched a brand new thermally conductive encapsulation resin. The product (SC4003) has been specially developed to fulfil user requirements for a low viscosity, thermally conductive encapsulation resin with a wide operating temperature range.

The user in question initially expressed an interest in Electrolube's encapsulation resins for an LED based application but listed some specific requirements including a room cure system, a temperature range of -60 to +200°C and thermal conductivity of 1W/m.K. The customer also specified a requirement for a low viscosity system with good flow characteristics that would easily facilitate the potting of difficult and complex geometries and ensure minimal stress on components.

ELECTROLUBE
THE SOLUTIONS PEOPLE

Phone: (02) 9938 1566
Web: electrolube.com.au

THIS CHRISTMAS, Premier BATTERIES

CAN REPLACE OR REBUILD YOUR ELECTRIC BIKE BATTERY (or any other battery!)

Got an e-bike with sick (or dead!) batteries? How about a mobility scooter, wheelchair, golf cart . . .

Premier Batteries can assist you with batteries – New and Reconditioned – which will get you going again. For 500 watt, 1000 watt and 2000 watt models.

Premier Batteries are specialists in Battery refurbishment. They can supply new or recell e-Bike or other batteries with High Quality Cells – often with higher capacities than the original.

Premier Batteries can replace, repair or refurbish rechargeable batteries for just about anything. Call them now before the holiday season.

PB
PREMIER BATTERIES
Unit 9, 15 Childs Rd, Chipping Norton NSW 2170
Ph: (02) 9755 1845 Web: premierbatteries.com.au

Three new Spectrum Riders from R&S

Rohde & Schwarz has expanded its successful R&S Spectrum Rider FPH family with three new base models providing frequency ranges from 5kHz to 6GHz, 13.6GHz and 26.5GHz. The R&S Spectrum Rider FPH was the industry's first handheld spectrum analyzer to offer a capacitive touchscreen and a unique frequency upgrade concept via keycodes. Since upgrades require neither downtime nor recalibration, users can effortlessly upgrade their base models, eg, from 26.5GHz to 31GHz.

New higher-frequency models enable the rugged R&S Spectrum Rider FPH to perform a vast range of measurement tasks in the field and lab. The R&S Spectrum Rider FPH is a handy tool for diverse applications, such as verifying signal transmission over 5G, broadcast, radar and satellite communications links.

The 2.5kg, battery-operated instrument will appeal to field technicians and lab engineers alike, as it supports everyday measurement tasks in aerospace and defense, mobile network testing and broadcasting, as well as tasks to be performed by regulatory authorities and tasks in education.

See more: www.rohde-schwarz.com/spectrum-rider

Contact: Mark Fisher at Rohde&Schwarz
Ph: 03 8544 8300
Email: sales.australia@rohde-schwarz.com

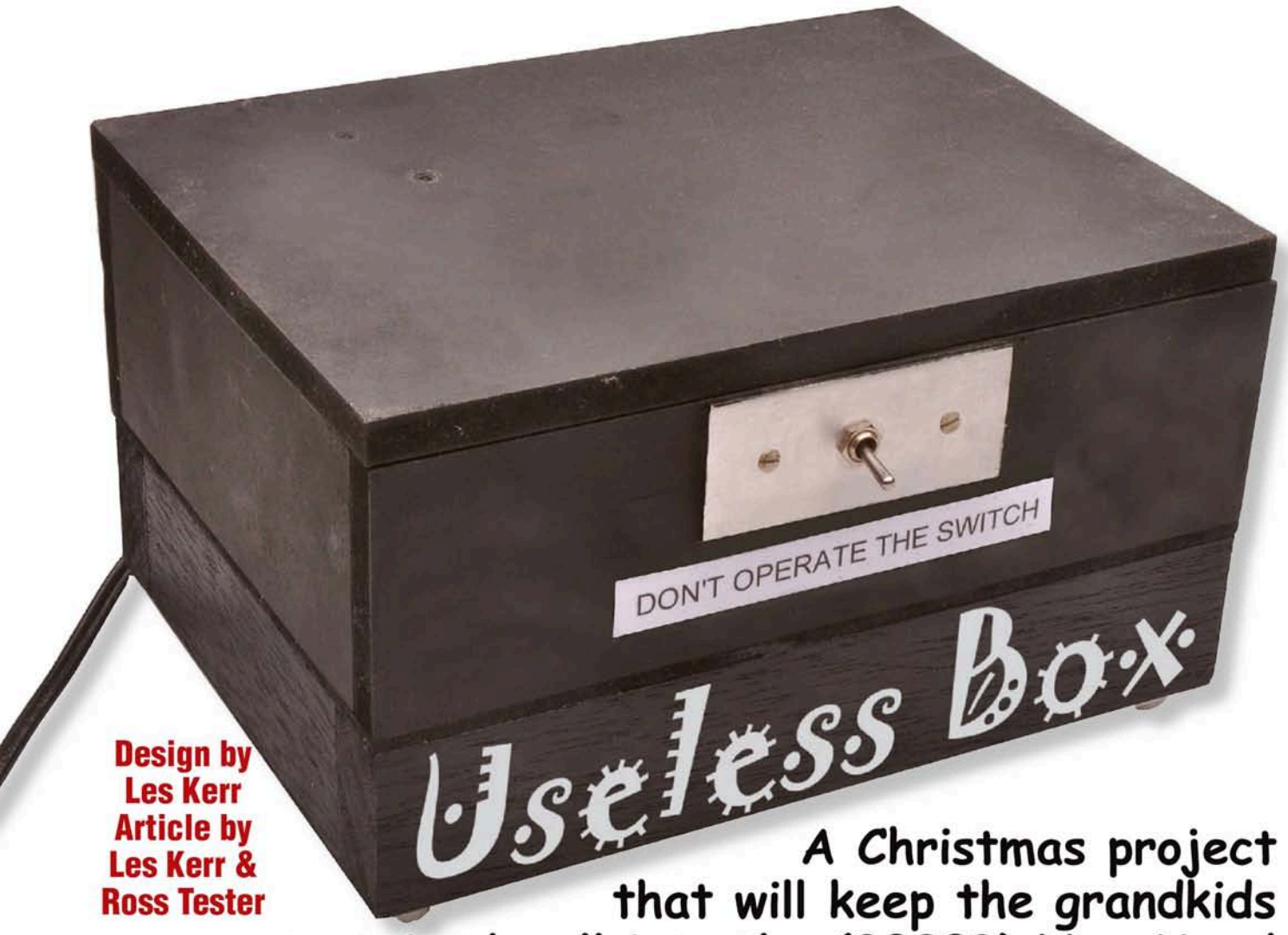

Design by Les Kerr
Article by Les Kerr & Ross Tester

A Christmas project that will keep the grandkids entertained well into the (2020?) New Year!

SILICON CHIP projects don't all have to be serious, nor solve one of mankind's greatest needs, nor even be all that practical. Some of them are whimsical; others – like this one – can be downright useless! Nevertheless, it's all good fun!

You'd remember the Pet Rock craze from a few years ago? The ultimate Useless Box would be just like one of those – that does absolutely nothing.

But we wouldn't mind betting that kids would get sick of a box that does nothing even faster than a pet rock!

This Useless Box doesn't lose any of its "uselessness" but it actually does something: if you disobey the instruction on the front and turn it on, it turns itself off again!

Now you'd have to agree that this is close to, but not quite, totally useless . . .

The Useless Box has one switch on it with a simple label: Don't Operate The Switch – which, of course, becomes overwhelmingly tempting for just about anyone – especially young children.

Froggy just sits there, minding his own business . . .

Uh-oh, someone has operated the switch! The lid flies open . . .

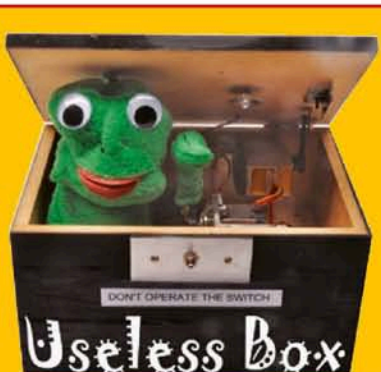

The light comes on and Froggy's hand (foot!?) comes up out of the box . . .

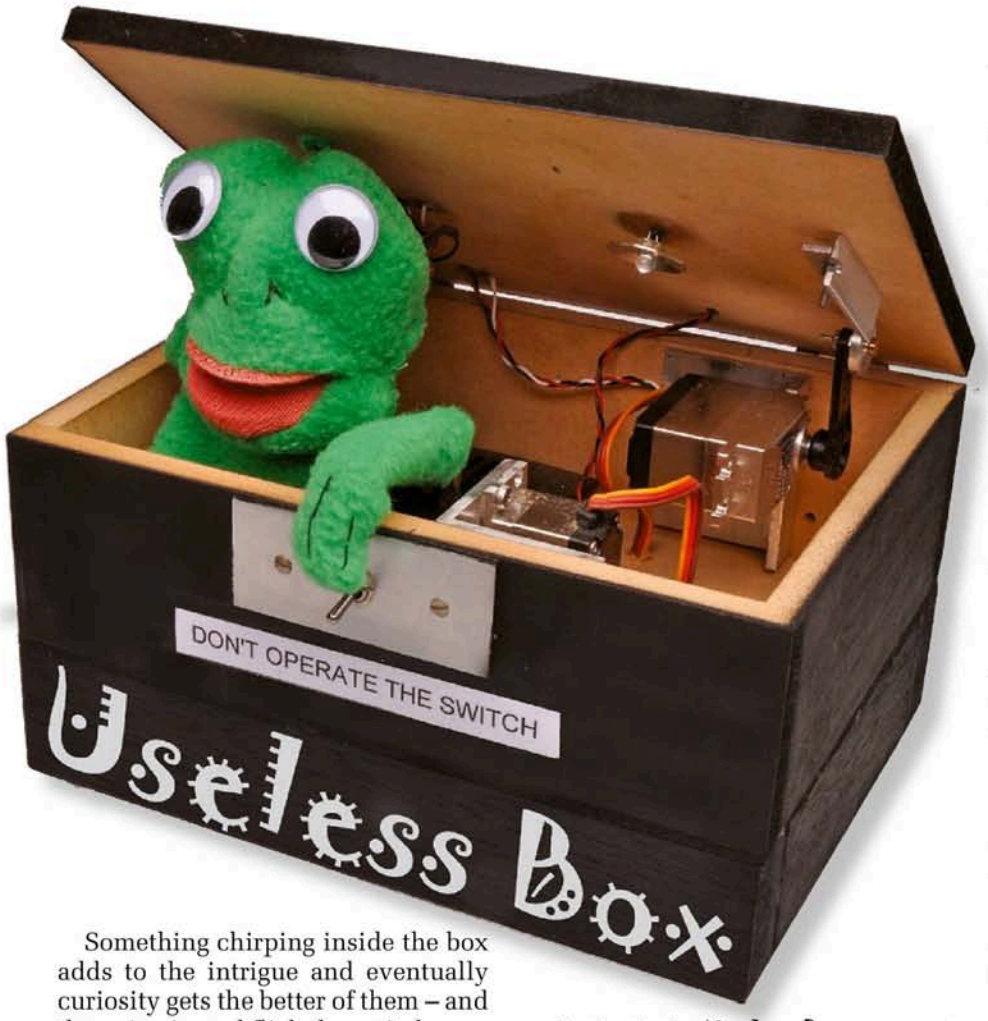

Something chirping inside the box adds to the intrigue and eventually curiosity gets the better of them – and they give in and flick the switch.

The box whirrs, its lid opens, a light comes on, a frog (yes, a green one!) pops out and his "hand" reaches out to turn the switch back off again, with a warning not to touch it again. "GO AWAY!" it says. (The frog's mouth moves in time with its "speech").

After which, the frog goes back inside the box, the lid closes . . . and that's it – until next time the switch is operated (which, of course, it will be before long!).

After this, the frog even gets a little aggro, throwing the lid open a couple of times and closing it, with a final "I TOLD YOU TO GO AWAY!"

So that's the Useless Box – a great gimmick to build for a Christmas present, particularly for the grandkids. (In fact, that is why the Useless Box came into being).

It will keep enquiring young minds amused for hours, wondering how Froggy knows that they've disobeyed his warning and how he pops out and turns the switch off again!

Just in case you're still wondering about the hows/whens/wheres/whys of the Useless Box, we've made a small video of it so you can see for yourself. You'll find it at **siliconchip.com.au/Videos/Useless+Box**

But why don't we start at the start – the Useless Box obviously needs a box!

The Useless Box box!

We used a hinged jewellery box which we obtained at a local bargain shop – ours measures 200mm x 150mm x 110mm but the dimensions aren't particularly important, just as long as it can house the internal workings.

You may find one slightly different – or, indeed, you may put your handyman skills to work and build your own.

Box material is also unimportant – any lightweight timber will do, as long as its made strong enough to handle many openings and closings. A lot of the commercial ones appear to be made from bamboo or craftwood.

It's nice if the top and bottom of the box are a tight fit when closed, too – you don't want to give any clue about what's inside box before inquisitiveness gets the better of them and the switch is flipped!

For all the above reasons, we haven't shown any drawings of the box. What we have shown is several photos of the frog and the box internals, which you can follow when crafting your own.

We'll get back to these shortly.

The frog's arm

The most important part of the mechanical design is the frog's arm.

It is U-shaped and attached to a servo so that when rotated through 180°, it extends over the front edge of the box and presses down on the power switch, toggling it.

You can see the arm both in its resting position and reaching out to turn the switch off in the photos of the box internals.

The photos also show an aluminium bracket on the lid which holds the lid closed when the frog is chirping.

This is so that the children can't

And reaches over, pushes down on the switch to turn it off . . .

He utters a few words while the light turns off and he slinks back inside . . .

And waits for the next person to ignore the warning and operate the switch . . .

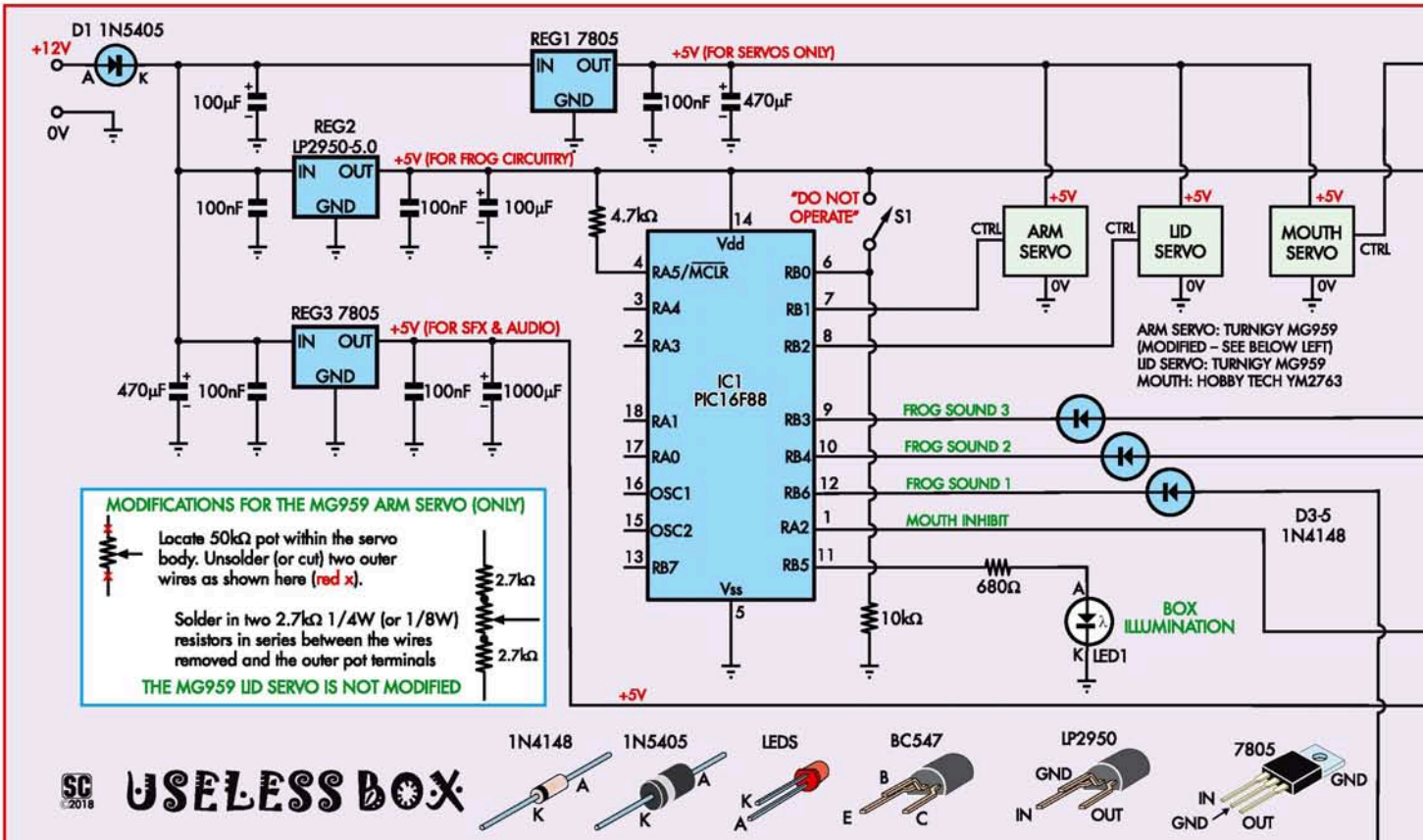

Fig.1: it's essentially a project in two halves – IC1, 2 and 3 provide the servo control and trigger the voice unit, which is the Digital Sound Effects Generator from August 2018. This has an inbuilt audio amplifier to drive a speaker.

open the lid easily – they have to operate the switch instead. When the box is closed, the bracket hooks onto the end of the servo arm which is later used to open the lid.

Whether you want to go to this extreme is entirely up to you – just remember, kids are inquisitive and will try to open the box if you make it easy!

The component parts

There are three parts to the design :

- the mechanical part, which provides the movement of the frog and its arm AND opens and closes the box;
- the electrical part, which provides the timing for the mechanical actions; and
- the sound part, which allows the frog's chirping and voice to be both recorded and played.

The servos

The major part of the mechanical side is the three servos, which provide all the movement in the Useless Box.

There is one servo to raise and lower the lid, while another moves the frog's arm to provide the switching action.

Both of these are Turnigy MG959 25kg/cm units, purchased from Hobby King but one, that controlling the arm, needs to be modified slightly (we'll look at this in a moment).

The third servo is a smaller, less powerful model which moves the frog's mouth in time with the words.

It is a Hobby Tech 13kg/cm model and came from Jaycar, Cat YM-2763.

If you have some spare servos in your junk box, you might be able to press them into service but keep in mind the 25kg/cm rating of the two larger types – the lid is not heavy but does require some force to open and close it. And Froggy's "hand" must strike the toggle switch with enough pressure to turn it off.

Ordinary "hobby" servos such

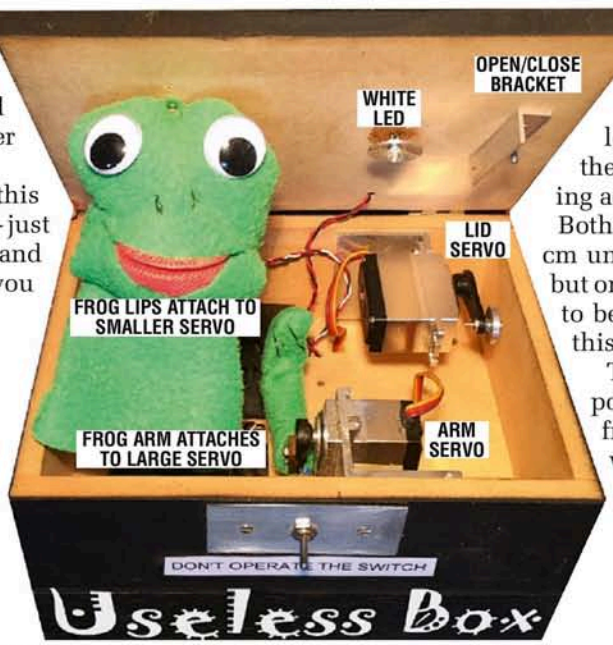

This internal photo shows how the frog body is connected to the lid but the arm is removed and attaches to one of the larger servos which turns the switch off. The rear servo opens and closes the lid via the aluminium bracket (not connected in this photo). This also prevents the lid being opened by inquisitive fingers! Note also the white LED attached to the lid and its concealed wiring. You could copy this directly, or perhaps come up with your own mechanical arrangement.

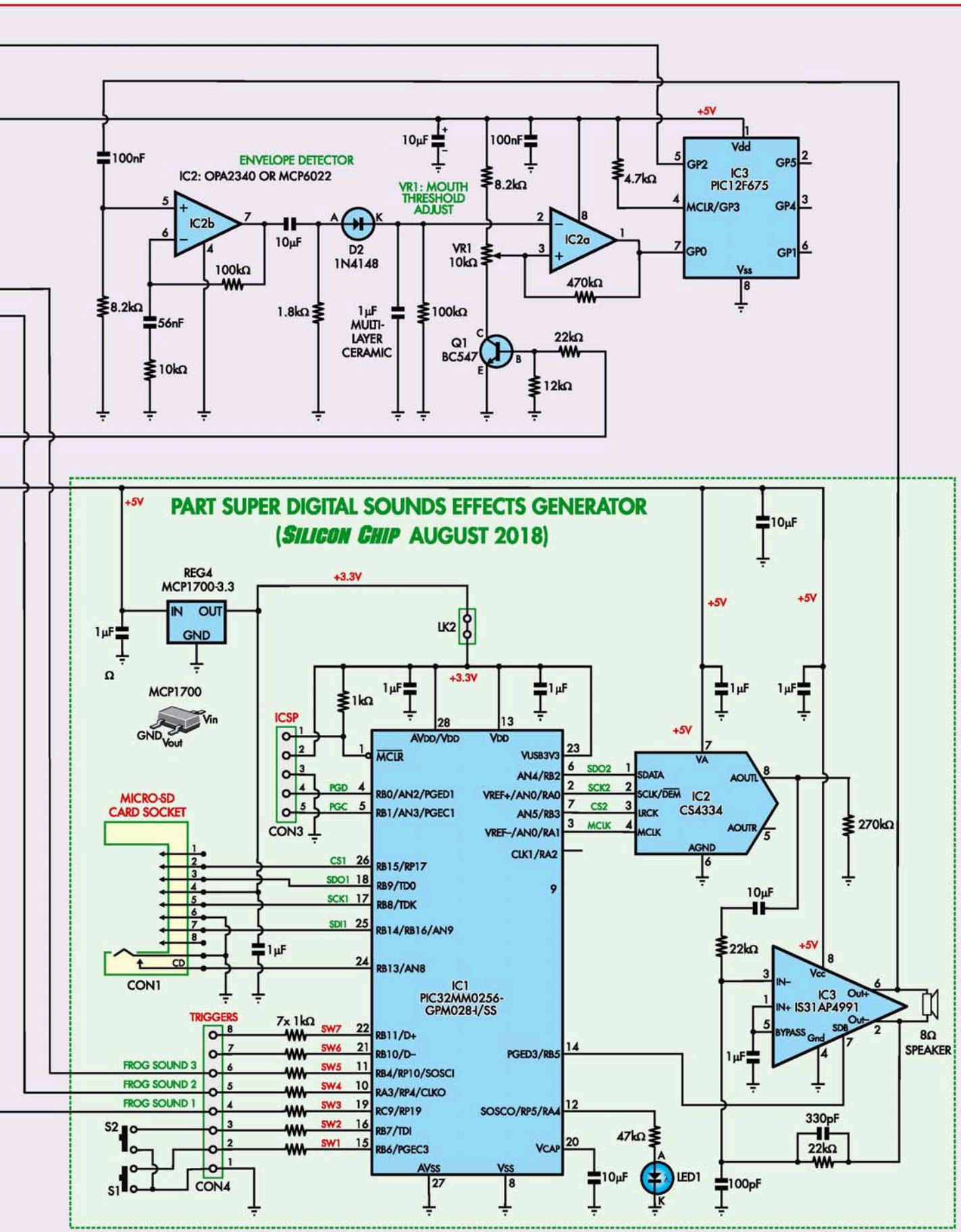

PART SUPER DIGITAL SOUNDS EFFECTS GENERATOR
(SILICON CHIP AUGUST 2018)
ENVELOPE DETECTOR
IC2: OPA2340 OR MCP6022
IC2b
IC2a
D2
1N4148
VR1: MOUTH THRESHOLD ADJUST
VR1
10kΩ
Q1
BC547
IC3
PIC12F675
Vdd
Vss
GP2
GP5
MCLR/GP3
GP4
GP0
GP1
+5V
100nF
10µF
8.2kΩ
4.7kΩ
100kΩ
56nF
10kΩ
1.8kΩ
1µF
MULTI-LAYER CERAMIC
470kΩ
22kΩ
12kΩ
REG4
MCP1700-3.3
IN
OUT
GND
+3.3V
LK2
1µF
Ω
MCP1700
Vin
GND
Vout
ICSP
CON3
1kΩ
MICRO-SD CARD SOCKET
CON1
CD
CS1
SDO1
SCK1
SDI1
PGD
PGC
AVDD/VDD
VDD
MCLR
RB0/AN2/PGED1
RB1/AN3/PGEC1
RB15/RP17
RB9/TD0
RB8/TDK
RB14/RB16/AN9
RB13/AN8
VUSB3V3
AN4/RB2
VREF+/AN0/RA0
AN5/RB3
VREF–/AN0/RA1
CLK1/RA2
IC1
PIC32MM0256-GPM028-I/SS
RB11/D+
RB10/D–
RB4/RP10/SOSCI
RA3/RP4/CLKO
RC9/RP19
RB7/TDI
RB6/PGEC3
PGED3/RB5
SOSCO/RP5/RA4
VCAP
AVSS
VSS
SDO2
SCK2
CS2
MCLK
SDATA
SCLK/DEM
LRCK
MCLK
VA
AOUTL
AOUTR
AGND
IC2
CS4334
270kΩ
22kΩ
IN–
IN+
BYPASS
Vcc
Out+
Out–
SDB
Gnd
IC3
IS31AP4991
8Ω
SPEAKER
330pF
47kΩ
LED1
100pF
TRIGGERS
7x 1kΩ
SW7
SW6
SW5
SW4
SW3
SW2
SW1
FROG SOUND 3
FROG SOUND 2
FROG SOUND 1
S2
S1
CON4

as those used for model aircraft, etc will probably not have enough force to achieve this.

The mouth movement is not quite as difficult, so a typical model servo should be quite adequate.

OK, back to the arm servo. As supplied, like most servos it only operates through 90° but we need it to operate through 180°.

The easiest way to achieve this is to open up the servo (it's not difficult) and locate the two ends of the 5kΩ position potentiometer. Disconnect the wires from each end of the pot and add in a 2.7kΩ, 1/4W resistor (or even 1/8W if you can get them) in series with the wire ends and the pot terminals.

Close the servo back up again and it will now work through 180°.

There's a YouTube video which shows how to do this if the description isn't clear: http://youtu.be/F0k-9CklRE0

Did someone mention mouth?

The frog's mouth moves in concert with the audio. The mouth itself is made from two half circles of brass wire. One is fixed in the horizontal plane adjacent to the servo shaft and the other is connected to the servo shaft itself.

To move the frog's mouth in sequence with him (her? it?) speaking, the audio signal is envelope-detected then this voltage is applied to a Schmitt trigger so that we get a mouth open/mouth closed signal to operate the mouth servo pretty much in time with the voice.

The first stage of the OPA2340 (IC2b) is wired as a non-inverting audio amplifier with a voltage gain of 11. Its output is rectified by a 1N4148 diode and the resultant DC voltage charges a 1µF capacitor.

The time constant of this capacitor and the parallel 100kΩ resistor is set so that the voltage applied to the negative input of the second OPA2340 (IC2a) follows the envelope of the audio signal.

IC2a is wired as an inverting Schmitt trigger whose output will be low if the voltage on its negative input exceeds the voltage on its positive input.

If the mouth inhibit signal is high, ie, BC547 transistor (Q1) is on, then the voltage on the positive input is set by the 10kΩ potentiometer.

PIC12F675(IC3) operates the mouth servo, opening the mouth if its input is low and shutting it if its input is high. In other words, if the envelope voltage is high then the mouth is open and if it is low the mouth is closed.

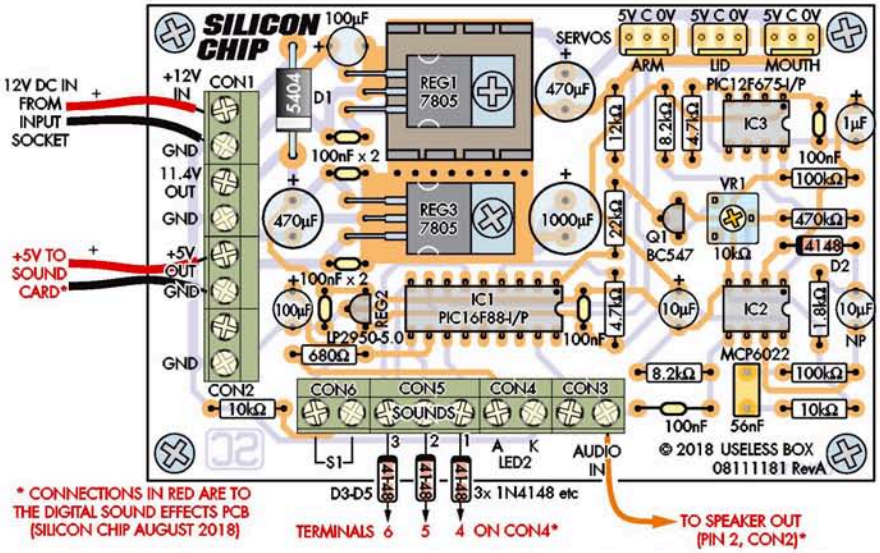

Fig.2: the control PCB component overlay, which matches the photo at right. Power for the Sound Effects/Audio amplifier board is taken from the pair of terminals indicated, with other connections to that board shown in red. Other connections were provided "just in case"!

The 10kΩ potentiometer provides an adjustment so that the mouth moves in time with the audio.

The voice recorder/amplifier

When Les Kerr originally submitted this project to SILICON CHIP, he used the Voice Recorder published back in our December 2007 for the sound effects, along with a separate "Champion" audio amplifier.

There was a major problem with this: the HK828 chip is now obsolete and becoming very hard to get (it's even been discontinued by Jaycar Electronics, who developed that project).

So we revised the **Useless Box** using the Super Digital Sound Effects Module we published just last August/September.

This will ensure that it will be current for many years.

It reads its messages from an SD card and uses a PIC micro to select them and the appropriate message to send to its inbuilt audio amplifier.

There's another reason to use the August module: the separate audio amplifier in the original **Useless Box** is no longer required – the IS31AP4991 can provide up to 1.2W into an 8-ohm speaker.

All you need to do with the new sound effects module is connect a speaker – and this can be just about anything that will fit in the box.

Chances are you have a suitable speaker in your junk box!

You can record whatever messages

Resistor Colour Codes (Controller only)

	No.	Value	4-Band Code (1%)	5-Band Code (1%)
❑	1	470kΩ	yellow violet yellow brown	yellow violet black orange brown
❑	2	100kΩ	brown black yellow brown	brown black black orange brown
❑	1	22kΩ	red red orange brown	red red black red brown
❑	2	12kΩ	brown red orange brown	brown red black red brown
❑	2	10kΩ	brown black orange brown	brown black black red brown
❑	2	8.2kΩ	grey red red brown	grey red black brown brown
❑	2	4.7kΩ	yellow violet red brown	yellow violet black brown brown
❑	1	1.8kΩ	brown grey red brown	brown grey black brown brown
❑	1	680Ω	blue grey brown brown	blue grey black black brown
❑	*2*	*2.7kΩ**	*red violet red brown*	*red violet black brown brown*

** required for modifying one servo for 180° operation. Preferably 1/8W; 1/4W should fit*

Resistors for the Sound Card are all SMD – refer to the article in August/September.

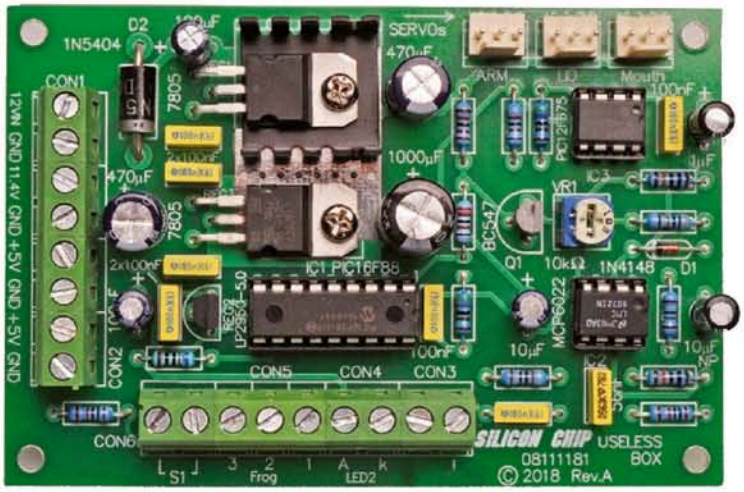

Here's a photo of the control PCB at left, reproduced same size. Many readers will be delighted to know that it's all "through hole" components – no 40/20 vision required for this one! No photo nor overlay is shown for the Sound Effects board: see August 2018 issue.

in whatever voices you want – the August/September 2018 tell you how to do that.

If you need an authentic frog sound, you'll find a recording of the Per tree frog at www.anbg.gov.au/sounds/

Software

Each of the three PIC microcontrollers in the Useless Box require different firmware.

If you purchase the PICs from SILICON CHIP they will come pre-programmed; otherwise you will need to download the hex files from siliconchip.com.au and program them yourself. We're assuming that you have the necessary knowledge and equipment to do this!

You will need **0811118A.hex** for the PIC16F88-I/P and **0811118B.hex** for the PIC12F675-I/P. The firmware for the Sound Effects Module pic (PIC32MM0256GPM028-I/SS) is **0110718A**.

So what does it do?

Not much . . . it's pretty useless!

We've covered a lot of this earlier in the description of the various sections but in a nutshell, the Useless Box IC1 (PIC16F88) lies dormant, waiting for an input from S1, the "Do Not Operate" switch on the RB0 input (pin 6). This input is normally held low by a 10kΩ resistor to 0V but goes high (ie, to 5V) when the switch is operated.

This switch operates "upside down" to what you might expect – "up" is on and "down" is off.

This is so Froggy's hand can turn the switch back to "off" by pressing down on it. (It's a lot harder to go the other way!). The miscreant who disobeys the warning sign pushes it up to operate it.

Each time the switch is turned on there is a different reaction.

The first time, it does not play any sounds – the frog switches S1 off in silence.

The second time, it drives RB4 high (pin 10 – frog sound 2; "Go away!") and the next time, RB3 (pin 9 – frog sound 3; "I told you to go away!"), which in turn trigger the Sound Effects Module IC1 inputs on CON4. First is pin 19; (RC9/RCP19), then pin 10, RB4; and finally pin 11 (RB4).

At the same time (and in the same sequence) the RB1 and RB2 outputs (pins 7 and 8) send the appropriate signals to their respective servos – RB1 activates the arm servo and RB2 activates the lid servo.

The mouth servo operates slightly differently as it has to work (roughly!) in time with Froggy's voice.

We won't try to reinvent wheels by describing the Sound Effects Module here – if you want to fully understand how it operates (including how you record your voice messages on the SD card), please refer to the articles in August and September 2018 (siliconchip.com.au/Series/325).

Of course, the three "frog sound" messages can be anything you wish to record on the SD card.

Power Supply

The Useless Box is powered from a 12V DC, 1A plug pack, connected to the box via a suitable DC socket .

Power connects from this socket to the +12V in and GND terminals at the top left of the PCB, thence via a 1N5404 reverse-polarity protection diode.

At 3A, this diode is arguably higher rated than might appear necessary but a typical 1N4xxx diode (rated at

ROUTINES

There are three different routines of operation that follow each other. They are started when the toggle switch on the front of the box is operated.

The first:
1 Inhibit mouth movement
2 Chirping sound (1) off
3 Open the box lid
4 Switch the light on
5 Frog arm moves out, closing the switch
6 Arm retracts
7 Switch light off
8 Box lid closed

The second:
1 Start frog sound 2 "go away"
2 Enable frog mouth movement
3 Open the box lid
4 Switch the light on
5 Frog arm moves out closing the switch
6 Move frog arm back a few degrees
7 Mute off
8 Pause 1.8 seconds to allow time for frog's voice to play
9 Retract frog arm
10 Switch off light
11 Close box lid

The third:
1 Open and close box lid twice. Switch light on when lid is open and off when closed. Open lid
2 Switch the light on
3 Start frog sound 3
4 Frog arm moves out, closing the switch
5 Move frog's arm back a few degrees
6 Pause 2.5 seconds to allow time for frog's voice to play
7 Retract frog's arm
8 Close lid
9 Switch initial frog chirping sound on (1)

1A maximum) may not have sufficient margin for error, particularly when more than one servo is operating. So a 3A diode it is. They're not that much more expensive than lower-rated diodes.

You will note on the circuit diagram that there are actually three 5V power supplies – one to power the servos, one to power the control microprocessor and other ICs and one to power the audio amplifier. The latter is further reduced to 3.3V for the SFX module.

It might appear that having three separate 5V supplies is a bit wasteful.

But it was done to avoid any power supply noise/feedback caused by the servos operating (they can be fairly noisy electrically!) and affecting the microprocessor circuits and/or the audio.

Besides, 5V regulators are quite cheap!

Construction

Once again, there are two parts to the project: the control PCB along with its hardware and the sound PCB, most of which is mounted on a second board.

For detail of the sound PCB, refer to the articles in the August and September 2018 issues (siliconchip.com.au/Series/325).

Most of the construction techniques can be seen from our photographs. While this seemed a sensible approach, no doubt there are many others!

We've already mentioned the servos and their functions. The rest is basically the electronics assembly, which is quite straightforward, and the dressing of the project.

The frog itself

We originally purchased a toy frog from a $2 shop but found it too difficult to modify. So instead we made one.

(OK, I lie: Mrs Kerr made one – she's much more adept at the sewing machine than I!).

The photos give a good idea of our Froggy – it's basically a tube of soft green stretch cloth for the body (he needs to be quite flexible when lifted up and down) and a completely separate arm, stiffened by some heavy wire attached to the servo.

This arm needs to be quite stiff in order to stay in place and also positively hit that switch. You don't really

Parts list – Useless Box

1 hinged "jewellery" box, size approximately 200mm x 150mm x 110mm (see text)

Control Board

1 double-sided PCB, 96 x 67mm, code 08111181 (from siliconchip.com.au/shop)
1 fabric toy frog (see text)
1 SPDT toggle switch (S1)
2 large servos, ~25kg/cm [eg Turnigy MG959 (Hobby King)]
1 small servo, ~13kg/cm [eg Hobby Tech (Jaycar) YM-2763]
7 2-way PCB mounting terminal blocks
1 3-way PCB mounting terminal blocks
3 3-pin male polarised headers for servos
1 TO-220 mini heatsink [Jaycar HH8502] with M3 6mm screw and nut
1 chassis-mounting DC socket
Aluminium brackets (see text)
Stiff wire (for mouth - see text)

Semiconductors

1 PIC16F88-I/P, programmed with 0811118A.hex (IC1)
1 PIC12F675-I/P, programmed with 0811118B.hex (IC3)
1 OPA2340 or MCP6022 rail-to-rail CMOS op amp (IC2)
2 7805 5V 1A positive voltage regulators (REG1, REG3)
1 LP2950-5.0 5V positive voltage regulator (REG2)
1 BC547 NPN transistor (Q1)
1 1N5404 3A power diode (D1)
4 1N4148 signal diode (D2-D5)
1 5mm high brightness white LED (LED1)

NOTE: Where there is a clash of part nos between the control board and the sound board (eg, LED1, IC1, etc), each refers to the part no on its respective PCB.

Capacitors

1 1000µF 16V electrolytic
2 470µF 16V electrolytc
2 100µF 16V electrolytic
1 10µF 16V electrolytic
1 10µF 16V NP electrolytic
1 1µF 16V electrolytic
1 1µF 16V multi-layer ceramic
6 100nF MKT or ceramic
1 56nF MKT

Resistors (all 1/4W, 1% unless stated otherwise)

1 470kΩ	2 100kΩ	1 22kΩ	2 12kΩ	2 10kΩ
2 8.2kΩ	2 4.7kΩ	1 1.8kΩ	1 680Ω	2 2.7kΩ 1/8W if possible

1 10kΩ mini horizontal trimpot (VR1)

Sound Board*

(Note: component IDs are from original August 2018 project)

1 double-sided PCB, coded 01107181, 55 x 23.5mm
1 SMD microSD card socket (CON1) [Altronics P5717 or similar]
2 mini SMD two-pin tactile pushbutton switches (S1,S2) (optional) [eg, Switchtech 1107G]
1 5-pin header (CON3) (optional, to program IC1)
1 speaker, size to suit (8Ω or greater)

Semiconductors

1 PIC32MM0256GPM028-I/SS programmed with 0110718A.hex, SSOP-28 (IC1)
1 CS4334 16-bit stereo DAC, SOIC-8 (IC2)
1 IS31AP4991 mono bridged audio amplifier, SOIC-8 (IC3)
1 MCP1700-3.3 LDO linear regulator, SOT-23 (REG1)
1 blue SMD LED, 3216/1206 package (LED1)

Capacitors (all SMD X7R ceramic, 6V, 2012/0805 size)

3 10µF	7 1µF 16V	1 330pF	1 100pF

Resistors (all SMD 1%, 2012/0805 size)

1 270kΩ	1 47kΩ	2 22kΩ	8 1kΩ	1 0Ω (LK2)

** The Sound Board is available as a complete kit (Super Digital SFX Module), containing all parts listed here, including pre-programmed IC1 and PCB, but NOT the speaker) from the Silicon Chip online shop – see www.siliconchip.com.au/shop/20/4658 for more details).*

notice that Froggy only has one arm and that it's not actually attached to the body!

Froggy has a separately-made head, made from the same material as the body but is filled with cotton wool to help it keep its shape.

The red mouth is sewn in and it holds its shape with two wires. One of these is fixed but the other attaches to the mouth servo so he talks in time with the voice.

A pinched nose ("nostrils" sewn together) and a pair of black button eyes fastened through some white discs finish off the design.

You'd have to agree that Froggy looks quite . . . froggy!

By the way, if you (or the grandkids!) have an aversion to frogs, there are obviously many other cloth toys out there that could be used, or made. Just follow the same principles.

Finally, we needed to ensure that the lid stayed closed when the lid servo was not being actuated – and couldn't be simply lifted up "for a look"!

So we made a small bracket to attach the lid to the servo arm to ensure it worked as we wanted it to. Again, this can be clearly seen in the photos.

Mounting the PCBs

Basically, it's just a matter of choosing a location which doesn't interfere with any of the mechanical "works" – the servos which open the lid, operate Froggy's arm and his mouth.

You can get some idea of the way we did it from the photos. Your method may of needs differ depending on any "extras" inside your case – such as a jewel drawer, for instance.

We'll leave that entirely up to you but a bit of experimenting might be needed to find the right positions.

Connecting the PCBs

Simply follow the labels on the PCB connectors – they're quite self-explanatory with one exception:

There are two "+5V OUT" terminals (with associated grounds). To avoid any interference between the servos and ICs/audio module, use the upper pair of +5V and GND terminals for the 5V supply to the sound effects PCB.

You can ignore the lower 5V and GND terminals along with the 11.4V and its GND terminals – they was provided "just in case" they were needed.

There are four other connections to be made between the control board and the Sound Effects board – the "audio in" which feeds the mouth movement circuitry (envelope detector and servo control), along with three diodes.

The former is self-explanatory – it is just a suitable length of hookup wire linking the two boards.

With any luck, (depending how you mount the two boards) the three diodes can make the connections between the two – otherwise short lengths of hookup wire may be required as well.

LED2 on the control board is an ultra-bright white type (the brighter the better). We found this one diode was enough to illuminate the internals when Froggy did his thing.

It can be attached to the inside of the lid with glue and the wires hidden in a hole drilled through the case lid. Just remember to leave plenty of slack in the connecting wires (to CON4) to allow the lid to open and close. Light gauge wire should be used so it can easily flex. SC

E-BIKE BATTERIES

Premier BATTERIES can assist you with batteries for e-Bikes – New and Reconditioned

For 500W, 1000W & 2000W models.

We are specialists in e-Bike battery refurbishment. We can supply new or recell e-Bike batteries with high quality cells – often with higher capacities than the original!

Contact Premier Batteries today to find out more.

LITHIUM ION AND LITHIUM PHOSPHATE BATTERIES

LITHIUM ION PHOSPHATE BATTERIES – ideal for golf carts/buggies and high rate deep cycle applications.

With less than half the weight and up to 7 times more charge/discharge cycles than sealed lead acid, lithium ion phosphate natteries offer many advantages including their ability to fast charge and give high rate output without damage!

Premier BATTERIES

Custom Manufacturer of Battery Packs

Made to your specifications

Unit 9, 15 Childs Rd, Chipping Norton NSW 2170

Tel: 02 9755 1845

www.premierbatteries.com.au

email: malcolmw@premierbatteries.com.au

A stamp sized digital audio player

The DFPlayer Mini is a low-cost digital audio player module. It's available from popular internet suppliers, including Banggood, as well as from marketplaces like eBay and AliExpress, for as low as a few dollars, including postage. Despite its size and price, it can do a lot!

This is a very flexible module with a great many features. I was very impressed after trying the module out for myself.

One of the best things about it is that it plays several different audio file formats, including MP3, WMA and WAV, in mono or stereo, and it can read those files off either a microSD card or USB flash drive with a capacity up to 32GB in either case. But it has a lot of other features, so let's take a look at the hardware involved and how to drive it.

What's inside the module

Circuit diagrams for the DFPlayer Mini module are hard to find but an examination of the module reveals that it's based on two ICs: a YX5200-24SS (IC1) which does most of the work and a smaller 8002 audio amplifier chip (IC2).

While data sheets for both devices are available, the sheet for the YX5200-24SS is almost entirely in Chinese. But I was able to glean enough info to draw the module's internal block diagram, shown in Fig.1.

The YX-5200 chip is the module's brains. Inside it, there's a 16-bit MCU (micrcontroller), an analog DSP (digital signal processor), EPROM and flash memory, a 24-bit stereo DAC (digital-to-analog converter), a serial UART for communication with an external MCU and ports to communicate with a microSD card or a USB thumb drive.

All this in a compact 24-pin SSOP (SMD) package – it's virtually a complete digital audio system on a chip!

The YX-5200 chip can play back MP3, WMA and WAV files at sampling rates of 8kHz, 11.025kHz, 12kHz, 16kHz, 22.05kHz, 24kHz, 32kHz, 44.1kHz or 48kHz.

It can handle files on either microSD ("TransFlash" or TF) cards or USB thumb drives with capacities up to 32GB, formatted with a FAT16 or FAT32 file system.

You can store up to 45 hours of CD-quality WAV files on a 32GB card/drive, or about 23 days worth of 128kbit MP3 files.

The 24-bit stereo DAC in the YX-5200 is claimed to provide a dynamic range of 90dB, with a signal-to-noise ratio (SNR) of 85dB. That isn't exactly hifi but it isn't too bad either.

The built-in MCU and DSP combine to provide features like audio gain adjustment over 31 levels and the ability to select one of six playback tonal equalisation settings.

You can also select the playback mode (normal/repeat/folder repeat/single repeat/random) and the playback source (USB drive, microSD card or a couple of other options).

It also provides a BUSY logic output signal which is at logic low level (<800mV) when playing a file, rising to logic high (~3.5V) when playback stops.

Turning to IC2, its operation is quite straightforward. Housed in an 8-pin SOIC package, it's basically just a low-power audio amplifier with a few extras.

Running from 5V, it can deliver up to 2W into a 4Ω loudspeaker load with 10% total harmonic distortion (THD+N), or 1.5W into an 8Ω load with 1% THD+N.

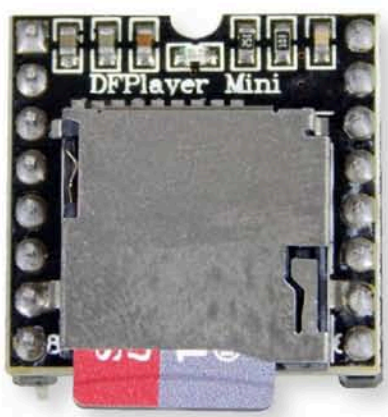

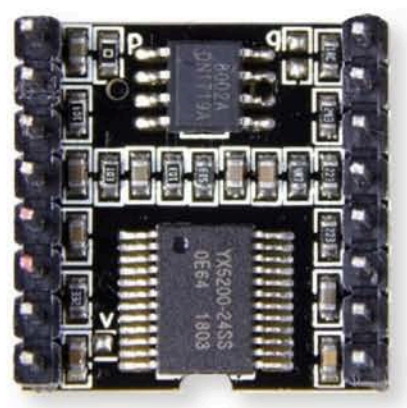

Views of the top (left) and bottom of the DFPlayer Mini module with a microSD card inserted. It is shown at close to double life size for clarity.

Features & Specifications

- ❑ Just 21 x 21 x 12mm including microSD card socket and pin headers
- ❑ Plays MP3, WMA and WAV audio files (4.3 filenames)
- ❑ 24-bit stereo DAC
- ❑ Built-in 2W mono bridge-mode amplifier
- ❑ Plays files from microSD cards or USB flash drives (up to 32GB)
- ❑ Multiple control options, from as few as four pushbutton switches to full serial mode control from a microcontroller such as an Arduino or Micromite
- ❑ Line-level stereo outputs which can also drive headphones
- ❑ Six playback equalisation options: Normal (flat), Pop, Rock, Jazz, Classical and Bass
- ❑ Programmable playback volume in 31 steps (0-30)
- ❑ Runs from a 3.3-5.2V supply, drawing 25mA when idle or 200-250mA during playback

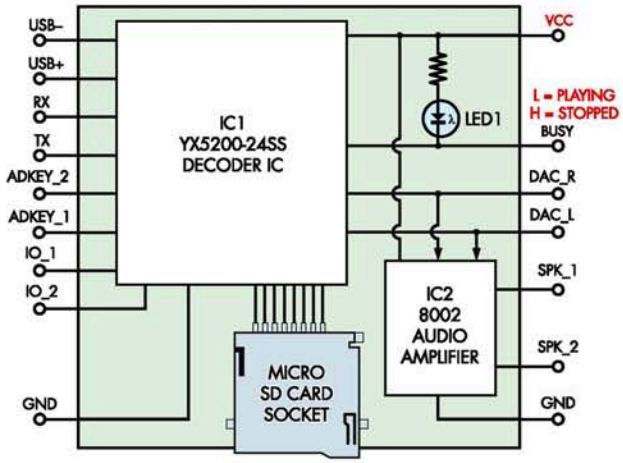

Fig.1: block diagram of the DFPlayer Mini audio player module.

It provides a push-pull (bridged) output and no output coupling capacitors, snubber network or bootstrap capacitors are needed. It's also unity-gain stable, has an externally programmable gain and includes circuitry to suppress clicks and plops during power on/off.

As you can see from Fig.1, the DFPlayer Mini module makes good use of the many features provided by both ICs.

As well as providing all of the main control inputs needed by IC1, it also features a microSD card socket on the top of the module connected directly to IC1. The latter's BUSY signal output is brought out to a pin and also drives LED1, a tiny blue SMD LED.

The left and right channel outputs from the YX5200's DAC are also brought out for use in driving either headphones or an external amplifier, in addition to being mixed together and fed into IC2 to drive a speaker directly.

No socket is provided for plugging in a USB thumb drive – just a couple of pins identified as USB- and USB+. I couldn't find any information on the use of these pins anywhere in the commonly available data sheets for the DFPlayer Mini module but I guessed that these could be connected to the D- and D+ signal lines of a USB socket, and as you will see later, I was right.

Putting it to use

Fig.2 shows how to wire up the DFPlayer Mini module. The speaker (if used) connects directly between the SPK_1 and SPK_2 pins (6 and 8) while the module's power supply (3.3-5.2V DC) is fed to pin 1 (V_{CC}) and pins 7/10 (GND).

The total current requirement is around 25mA when idle, rising to around 200-250mA during playback.

The module can be used as a self-contained audio player controlled merely using four SPST pushbutton switches, connected as shown in Fig.3. Alternatively, a much larger array of 20 pushbuttons can be connected as shown in Fig.4.

Otherwise, its operation can be controlled entirely from an Arduino, a Micromite or many other kinds of microcontroller, using the UART serial port lines at pins 2 (RX) and 3 (TX), along with the BUSY signal from pin 16. This configuration is shown in Figs.5 & 6.

The rest of the connections are to make use of the module's extra features.

For example, you can use it to play files from a USB thumb drive by connecting up a Type A USB socket as shown at the top right of Fig.2, with pin 1 connected to the +5V supply, pins 2 and 3 to pins 15 (USB-) and 14 (USB+) of the module, and pin 4 to the module ground (pins 7 or 10).

The dashed connections to pins 4 (DAC_R) and 5 (DAC_L) of the module show how it can be used to drive either stereo headphones or line-level outputs to an external stereo amplifier or hifi system.

Returning now to Fig.3, which shows the simple four-pushbutton control scheme, S1 and S2 have dual functions in this mode. A short press is used to move to the previous track (S1) or the next track (S2), while a longer press either decreases (S1) or increases (S2) the volume. S3 and S4 each have only single functions, to start playing the first track (S3), or the fifth track (S4).

The more complex pushbutton con-

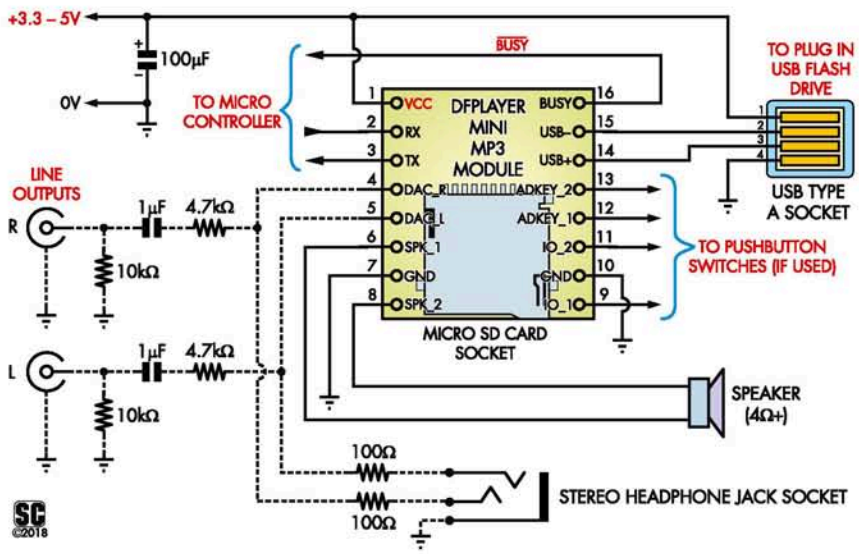

Fig.2: This shows how to connect the audio player module for playback to a speaker, headphones or other audio devices via the level outputs.

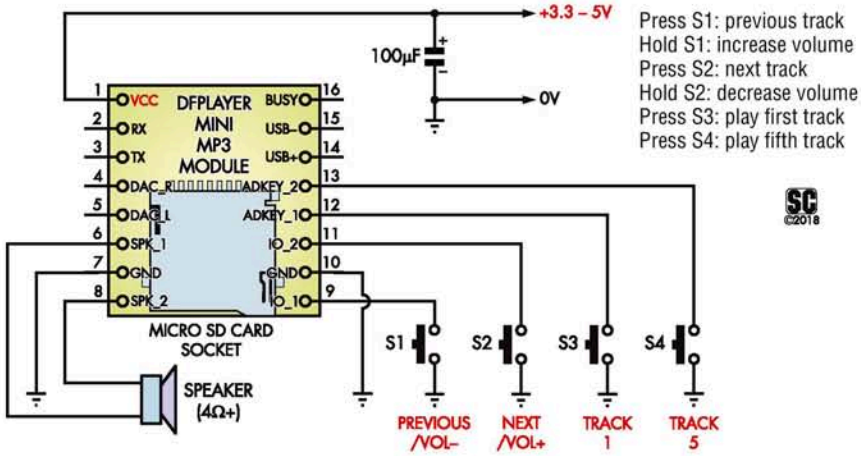

Fig.3: the simplest method of controlling the DFPlayer module is by using four pushbutton switches. Track 5 is equivalent to 005.mp3 (four characters at most for a filename, three for the extension); folders are named 01 to 99.

trol arrangement of Fig.4 is a bit more tricky. To allow twenty pushbuttons to be connected using just two pins, each of the ten pushbuttons in a given "bank" has a different resistor value connected in series.

The chip then measures the current sunk from pin 12 or 13 when a button is pressed and depending on what range it is in, it knows which button was pressed.

In this mode, most of the extra switches (S7 - S20) are simply used to allow direct selection of tracks to play.

Switches S5 and S6 basically duplicate the actions of S1 and S2 in Fig.3, while the first four switches (S1 - S4) allow control over the playback mode (single track/continuous), playback source (USB/SD/SPI/SLEEP), enable loop all mode and provide the pause/play function.

Controlling it with a micro

Hooking the DFPlayer Mini up to a microcontroller is simple, thanks to the module's built-in UART serial port. You just need to connect the module's RX input (pin 2) to the serial TX output of the micro and connect the module's TX output (pin 3) to the serial RX input of the micro. The GND of the module (pin 7 and/or 10) also needs to be connected to the micro's ground network.

The module's UART is pre-programmed to communicate at 9600 baud, with the basic 8N1 protocol. It's also a good idea to link the module's $\overline{\text{BUSY}}$ output (pin 16) to a digital input on the micro so that the control program can tell whether the module is playing a file or has stopped.

Arduino specifics

Fig.5 shows the connections for controlling the module from an Arduino. It's powered from the Arduino's 5V supply, which is fed to its V_{CC} pin (pin 1). For serial communications, we're using Arduino digital I/O pins 10 and 11, which are driven by the SoftwareSerial library code.

The D11 digital output is connected to the RX pin on the module via a 1kΩ series resistor. That's because the module inputs can handle a 3.3V signal while the Arduino pins have a 5V swing.

The resistor limits the current into the module's RX pin to a reasonable level (less than 2mA) when D11 is driven high. The only other connection needed is between pin 16 of the module ($\overline{\text{BUSY}}$) and D3 of the Arduino, for the reasons described above.

For clarity, Fig.5 does not show a USB socket, headphone socket, line outputs etc, which were shown in Fig.2. But these can certainly be included if you need those functions.

There are many different libraries and sketches on the internet which show how to drive the DFPlayer Mini from an Arduino, although some are a bit flakey and/or hard to understand.

But one of the best is from the manufacturers themselves, DFRobot and is called "DFRobotDFPlayerMini-1.0.3.zip". It includes a set of exam-

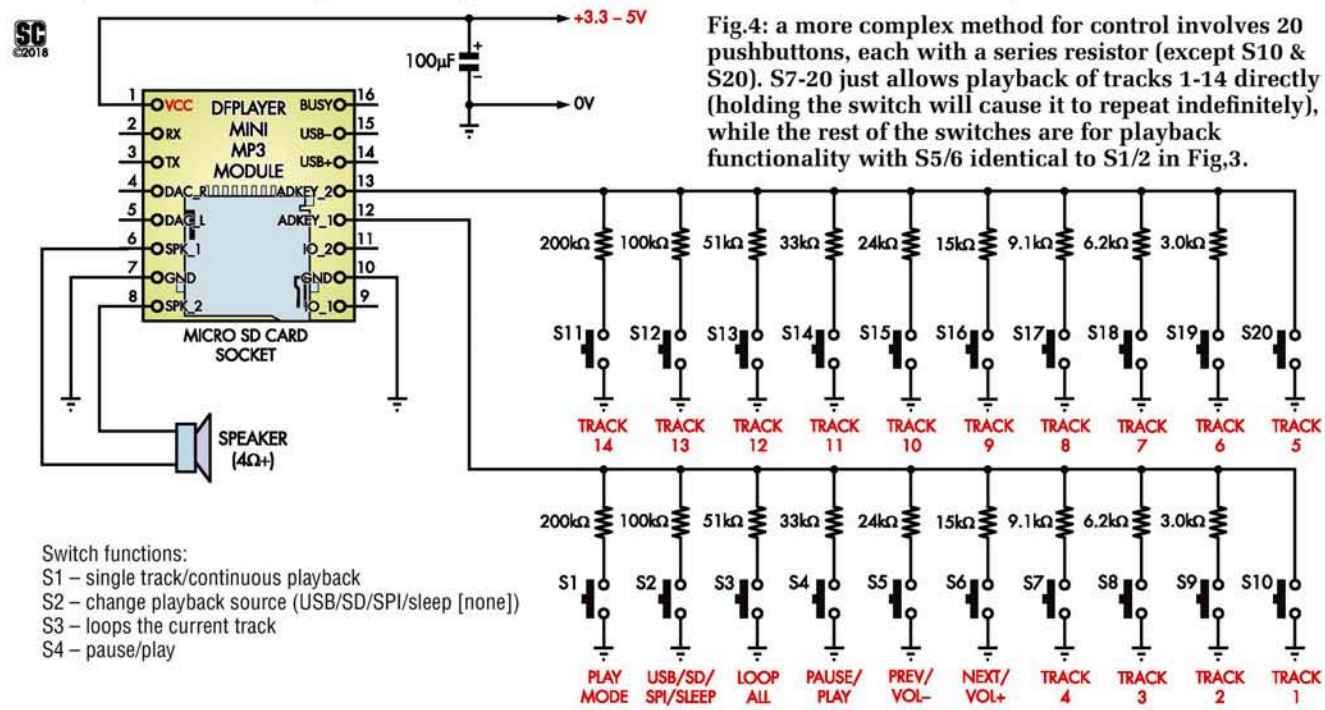

Fig.4: a more complex method for control involves 20 pushbuttons, each with a series resistor (except S10 & S20). S7-20 just allows playback of tracks 1-14 directly (holding the switch will cause it to repeat indefinitely), while the rest of the switches are for playback functionality with S5/6 identical to S1/2 in Fig.3.

Switch functions:
S1 – single track/continuous playback
S2 – change playback source (USB/SD/SPI/sleep [none])
S3 – loops the current track
S4 – pause/play

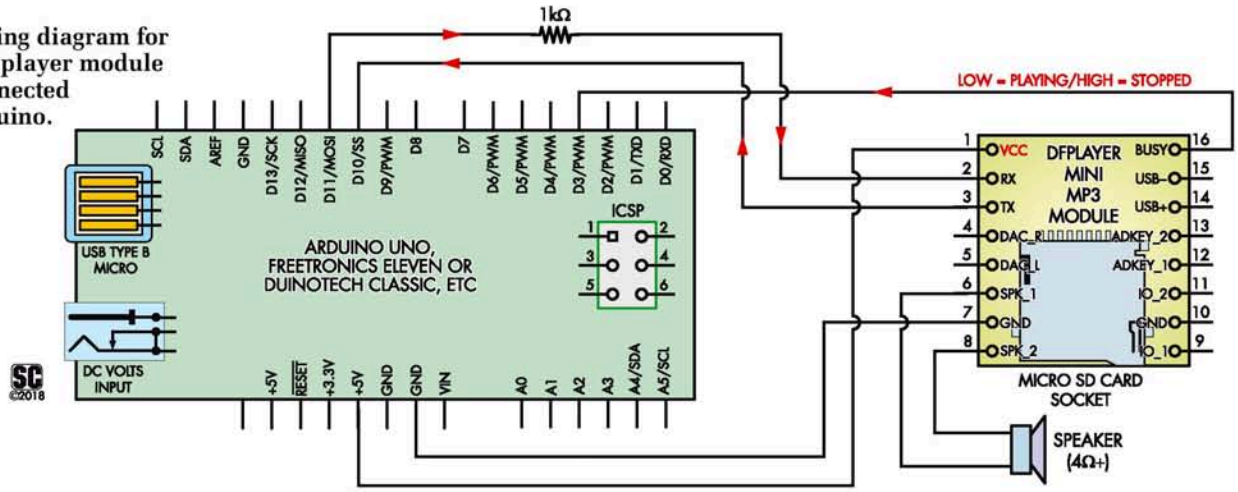

Fig.5: wiring diagram for the audio player module when connected to an Arduino.

ple sketches and you will find a link to download it below.

Driving it from a Micromite

If you're one of the many Micromite enthusiasts, Fig.6 shows the basic connections needed to control the DFPlayer Mini module from a Micromite Backpack.

The arrangement is very similar to that for the Arduino. The module's RX (2) and TX (3) pins are connected to pins 9 and 10 of the Micromite respectively, again with a 1kΩ series resistor in series with the line to the module's RX pin.

Pins 9 and 10 of the Micromite are the TX and RX pins for the Micromite's COM2 serial port. The remaining connection is from the $\overline{\text{BUSY}}$ pin (16) of the module to pin 24 of the Micromite, again to provide a playing/not playing signal. And again, for clarity, Fig.6 leaves out any extra connections you may wish to make to the DFPlayer module, like those shown in Fig.2.

I couldn't find any pre-existing Micromite programs to control a DFPlayer Mini, so I wrote one myself, after studying the YX5200-24SS data sheet and also some of the Arduino library files. The program is called "DFPlayerMini control program.bas" and it's available from the SILICON CHIP website.

It's designed to run on the LCD BackPack (see February 2016 [siliconchip.com.au/Article/9812] and May 2017 [siliconchip.com.au/Article/10652] issues);

As you can see from the screen grab of the LCD touchscreen, the program gives you a set of six touch buttons labelled PLAY, PAUSE, PREV, NEXT, VOLUME (down) and VOLUME (up). Touching any of these buttons makes the Micromite send a command to the module to achieve the desired response, similarly to how the hardware switches shown in Fig.3 work.

Now this MMBasic program is pretty simple but it should give you a good starting place for writing more elaborate programs yourself. With the technical information on the DFPlayer Mini module in this article, you should be able to get the module performing all kinds of impressive tricks!

Handy links

Module information and software: siliconchip.com.au/link/aald

Software library and sketches: siliconchip.com.au/link/aale

Documentation and Arduino library: siliconchip.com.au/link/aalf SC

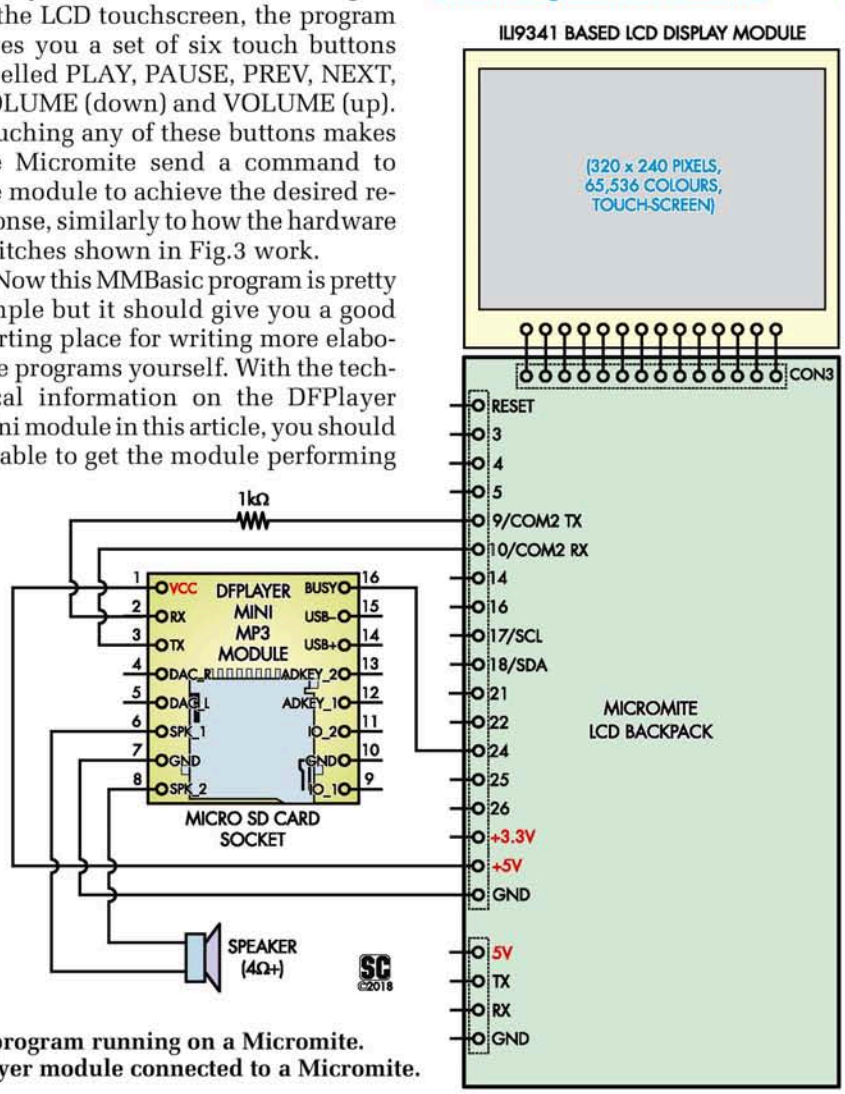

Above: screenshot of the MMBasic example program running on a Micromite.
Fig.6 (right): wiring diagram of the audio player module connected to a Micromite.

CIRCUIT NOTEBOOK

Interesting circuit ideas which we have checked but not built and tested. Contributions will be paid for at standard rates. All submissions should include full name, address & phone number.

Simple guitar practice amp

When you are playing an electric instrument at home, you don't need a big, powerful amplifier. A few watts is plenty, especially with an efficient speaker. For example, the Dipole Guitar/PA Speaker described in the September 2018 issue (siliconchip.com.au/Article/11223) produces around 100dB @ 1W/1m, which is quite loud.

This circuit is a very simple amplifier with a high input impedance, to suit magnetic or piezo pickups. The high input impedance is provided by a JFET input stage. This also introduces some second harmonic distortion, which affects the tone produced by the speaker.

Since the circuit runs off a 9-15V DC supply, you can use a wide variety of power supplies, including standard plugpacks and lead-acid or lithium-ion batteries.

The signal from the instrument pickup is applied to CON1, where a 10MΩ resistor to ground provides DC biasing. The signal is then AC-coupled to the gate of JFET Q1 by a 10nF capacitor with a 1kΩ series resistor to protect the circuit from spikes. The JFET gate is also biased with a 10MΩ resistor to ground, setting the input impedance to around 5MΩ (10MΩ || 10MΩ).

Q1 acts as a source-follower buffer, with a gain slightly less than unity. Its drain supply voltage is filtered by a 100Ω series resistor and 100µF & 100nF bypass capacitors, to keep supply ripple out of the audio signal.

The buffered signal at its source has a DC level around half supply, due to the voltage developed across the 1kΩ source resistor from the standing current through Q1. But this current depends on the exact JFET used and since it and the supply voltage can vary, it may not sit exactly at half supply. That isn't a problem though, as the output stage will overload before the input buffer.

The buffered signal is fed to a pre-out at CON2, which could be used for level monitoring or to connect an external amplifier. It's coupled to CON2 via a 10µF non-polarised capacitor so that the DC bias can be set to ground by the 100kΩ resistor.

The signal is also fed to power amplifier IC1 via a 2.2µF non-polarised capacitor. This is a "power op amp" with internal feedback to provide a fixed gain of 177 times (47dB). That high gain is needed since typical electric instruments only produce a few tens of millivolts and we need to increase that to a couple of volts to drive the loudspeaker.

IC1 can drive a 4Ω load at up to 5W with a 13.2V supply, or 6W with a 14.4V supply. It can also drive an 8Ω load but the output power will be less; in this case, you would ideally use a 15V supply to obtain the maximum possible power. It will need a heatsink with a thermal resistance to ambient of less than 10°C/W. Its quiescent power is 1-2W, depending on the supply voltage.

IC1 will shut down if it overheats, to protect itself. It also has overload/short-circuit protection and circuitry to reduce clicks and thumps from the speaker at power-on and power-off.

1000µF & 100nF bypass capacitors are provided for IC1, to keep its supply impedance low. It drives the speaker via a 2200µF electrolytic capacitor, to remove the DC bias at its output. This

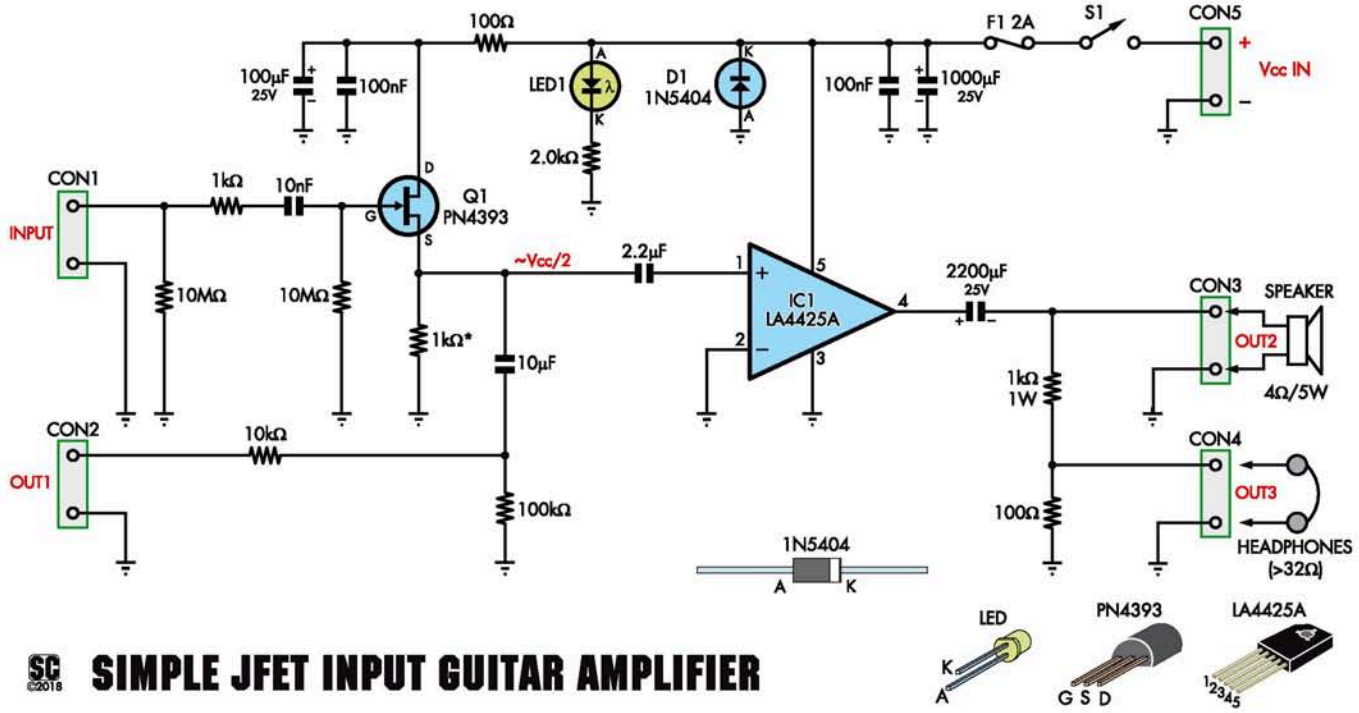

SIMPLE JFET INPUT GUITAR AMPLIFIER

Circuit Ideas Wanted

Got an interesting original circuit that you have cleverly devised? We will pay good money to feature it in Circuit Notebook. We can pay you by electronic funds transfer, cheque or direct to your PayPal account. Or you can use the funds to purchase anything from the SILICON CHIP Online Store, including PCBs and components, back issues, subscriptions or whatever. Email your circuit and descriptive text to editor@siliconchip.com.au

Accurately measuring voltage and current at the same time

If you are trying to measure the voltage across a device and the current flow through it at the same time, the resulting readings can be inaccurate, especially if one or both of the readings are low values.

That's because ammeters have a non-zero resistance and voltmeters have a finite resistance. So when you place an ammeter in series with a circuit, there is a voltage drop across it (the meter's "burden voltage").

This is generally higher at lower current ranges. If the voltmeter is connected to point "A", that voltage drop will mean that it does not read the actual voltage across the load.

And when you connect a voltmeter across a circuit, some current will flow through it, potentially affecting your current reading (the meter's "burden current"). This will be the case when the voltmeter is connected to point "B". So regardless of which way you connect it, your measurements will be inaccurate.

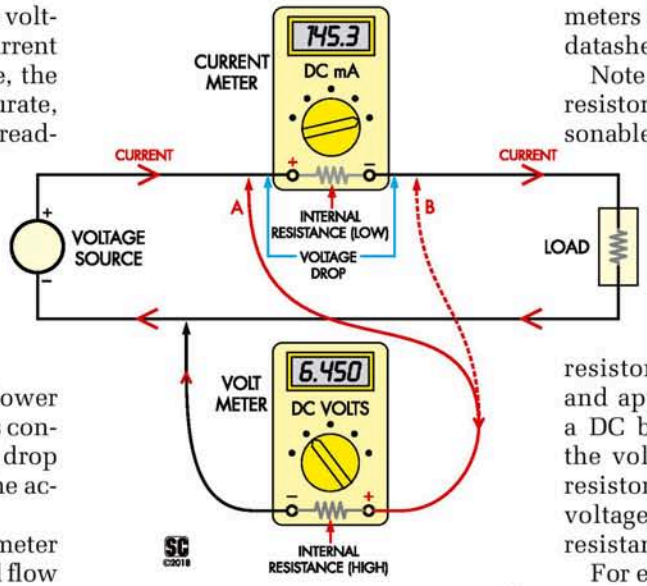

For example, a voltmeter with a 200V range will typically have a resistance of around 10MΩ and that translates to a burden current of up to 20µA. An ammeter with a 20µA range may have a resistance of 1kΩ and therefore a burden voltage of up to 20mV.

Ammeter burden voltages were discussed in detail in an article on building a Microcurrent DMM Adaptor in the April 2009 issue (siliconchip.com.au/Article/1400).

Determining error magnitude

It is relatively easy to compensate for these errors. You need to measure the resistance of your voltmeter and ammeter (on the ranges you will be using) and then plug these into some formulae, along with the readings, to calculate accurately compensated values.

You could do this by simply connect an ohmmeter across each set of meter terminals (when set in the correct mode) and make a note of the resistance reading.

However, ohmmeter accuracy is not normally that good (typically around 0.5-1%) so instead, I recommend you purchase two 0.1% resistors, close in value to the resistances of your two meters (either based on the manual/datasheet or a rough measurement).

Note that the highest value 0.1% resistor you're likely to find at a reasonable price is 1MΩ but that will be adequate for measuring the resistance of a nominally 10MΩ meter. You can get 0.1% resistors from suppliers like element14, Digi-Key and Mouser.

Now connect one of the resistors in series with the meter and apply a stable voltage (eg, from a DC bench supply), then measure the voltage across the known value resistor and the meter terminals. The voltages will be proportional to the resistances.

For example, if you connect a 1MΩ 0.1% resistor in series with a voltmeter and get a reading of 0.36V across the resistor and 3.72V across the meter, you can then determine that the voltmeter's burden resistance is close to 1MΩ × 3.72V ÷ 0.36V = 10.333MΩ.

Calculating the true values

Once you know the meter resistances and which reading you need to correct, you can plug the values into the correction formula.

In the case where you have the voltmeter across the supply, you need to correct the voltage reading and the formula is:

$$V_{load} = V_{measured} - I_{measured} \times R_{ammeter}$$

In the case where you have the voltmeter across the load, you need to correct the current reading and the formula is:

$$I_{true} = I_{measured} - V_{measured} \times R_{voltmeter}$$

As this correction is especially applicable when plotting voltage/current pairs to form a V-I curve, you can build the appropriate formula into a set of spreadsheet cells to automatically calculate the corrected values in a third column.

Rodger Bean,
Watson, ACT. ($50)

will introduce some distortion but given the relatively low power levels and the fact that this is a practice amp, that doesn't matter. IC1's rated distortion is around 0.1%.

The voltage at the speaker is divided down by a factor of 11 by two resistors, to provide a headphone output. Ideally, the headphone impedance should be at least 32Ω or else the frequency response may be less than ideal due to the relatively high driving impedance.

Power switch S1 is for convenience and the supply current flows through 2A fuse F1 to protect the supply from circuit faults. Diode D1 will cause F1 to blow if the supply polarity is connected incorrectly. LED1 lights to indicate that the circuit is powered.

A volume control can be added by replacing the 1kΩ resistor connected to the source of Q1 with a potentiometer whose wiper is fed to pin 1 of IC1 via the 2.2µF capacitor.

Petre Petrov,
Sofia, Bulgaria. ($60)

1kHz crystal-locked sinewave oscillator

Sometimes you need a clean sinewave with an accurate frequency for testing certain equipment. This circuit provides a 1kHz sinewave which will not drift in frequency as its frequency is locked by a crystal resonator.

It uses a Wien Bridge Oscillator to generate the sinewave for minimum distortion but it does not require a small lamp for amplitude stabilisation as many Wien Bridge circuits do. It uses a JFET in this role instead.

Since you can't easily get a 1kHz crystal, a 4.096MHz crystal (X1) is used instead. This is driven by the internal oscillator amplifier in IC2, a 4060B binary counter. 22pF load capacitors are connected from each end of the crystal to ground to make the circuit resonant. Most crystals require load capacitors close to this value.

A 100Ω series resistor limits the crystal drive power to a safe level while a 10MΩ resistor across the crystal provides a bias current for the oscillator amplifier to make oscillator start-up reliable.

IC2 has outputs labelled O3 through O13 which produce square waves at a fraction of the crystal frequency. The frequency at O3 is divided by 16 (2^{3+1}), O4 is divided by 32 (2^{4+1}) and so on, to O13 which is divided by 16,384 (2^{13+1}). The one we want is O11 which is divided by 4096, giving precisely 1kHz.

This is fed straight to the "pulse out" terminal but also passes through a series of three low-pass RC filters, each of which has a -3dB point of just over 1kHz. These help to turn the square wave output of IC2 into something smoother and more like a sinewave. They also attenuate the signal somewhat, as their corner frequency is close to the signal frequency.

The signal then passes through a high-pass filter with the same corner frequency, to remove the DC bias and provide some further attenuation. Attenuation is needed because we want the reference signal just to nudge the oscillator one way or the other to keep it locked to the crystal; if the signal from the crystal had too much influence on the oscillator, it would distort the sinewave output.

That attenuated signal is coupled to one side of the Wien Bridge oscillator which is formed around op amp IC1a.

The main sections of the bridge are symmetrical and each consist of a resistance provided by three fixed and one variable resistor plus a 33nF capacitor. One such network connects between the non-inverting input (pin 3) of IC1a and ground, with the other identical network between the pin 3 input and pin 1, the output.

Trimpots VR1 and VR2 are adjusted so that the oscillator's natural frequency is close to 1kHz, then the signal from the crystal, which is injected to the top end of the 1kΩ resistor to ground, makes the required adjustments.

IC1a needs to operate with a gain of about three times to start oscillation, which is provided by the 100kΩ and 47kΩ feedback resistors. But the gain needs to fall until it is close to unity once the oscillator starts, to avoid gross distortion. JFET Q1 is configured to acts as an automatic gain control, providing this function.

JFETs are depletion-mode devices which means they conduct current with no gate bias. This is an N-channel type, so its gate needs to be pulled negative relative to its source to reduce the channel current. Note that the drain and source are identical and change roles depending on whichever has a more negative voltage, but that doesn't affect the operation of the circuit, since the gate voltage is biased negative.

Since op amp IC1 runs from a split supply, which includes a negative rail, a negative bias voltage can easily be derived from the output of IC1a. Each time output pin 1 swings negative, diode D1 is forward-biased and this charges the 1µF capacitor to a negative voltage, which is reduced to a lower voltage by trimpot VR3 and its wiper is connected to the gate of Q1.

VR3 is adjusted so that once the oscillator amplitude is at the desired level, Q1 gets just enough bias voltage to reduce the gain of IC1a to the point where the amplitude stabilises. Thus, VR3 controls the output amplitude. Note that the current through VR3 continually discharges the 1µF capacitor, so that its voltage is reduced if the oscillator amplitude falls.

The remaining three op amps within the LF347 quad package provide some extra functions. The sinewave output from IC1a is buffered by IC1b before being fed to the output terminal so that any loading from the external circuit

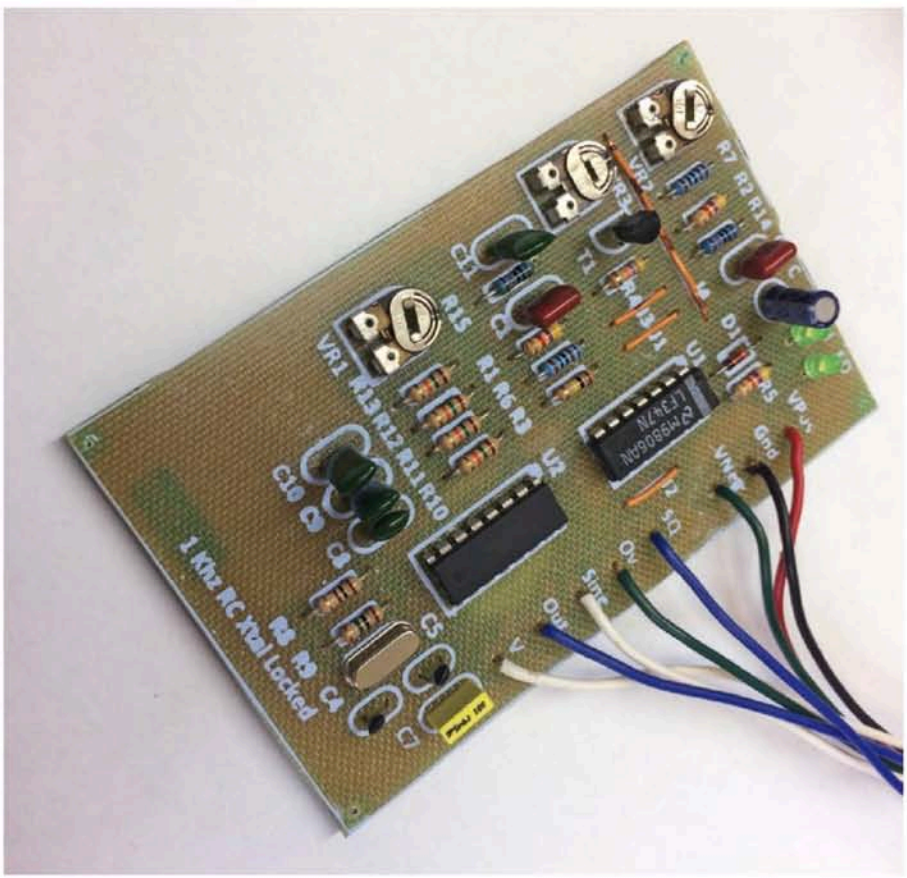

will not affect the oscillator. IC1c is configured as a comparator, to provide a square wave output derived from the sinewave, which should have a duty cycle close to 50%.

IC1d compares the reference frequency from the crystal to the output of the oscillator and drives LED1 and LED2. These should not be illuminated if the two oscillators are locked properly. If for some reason the sinewave oscillator is not at the correct frequency (eg, VR1 or VR2 needs adjustment) then you will see LED1 and/or LED2 flash.

Jumper JP1 is used as a power switch, JP2 is shorted to enable the comparator which drives LED1 and LED2, JP3 is shorted to enable the main oscillator and JP4 is shorted to enable the AGC action of Q1.

I have designed a PCB for this project. The pattern can be downloaded as a PDF from the SILICON CHIP website.

Michael Harvey,
Albury, NSW. ($75)

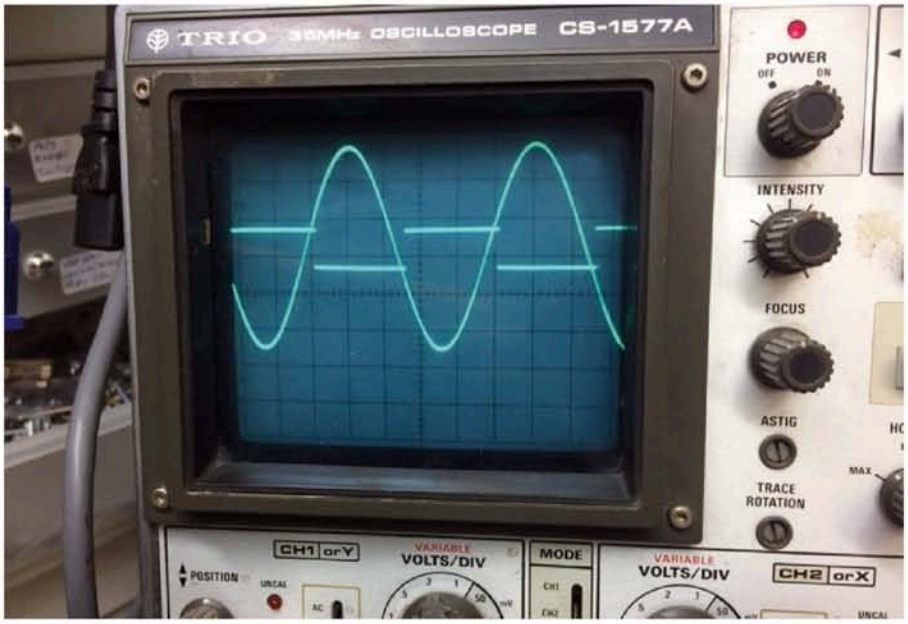

This shows the sinewave and square wave outputs of the oscillator, which are phase-locked. The sinewave appears quite pure and has low distortion.

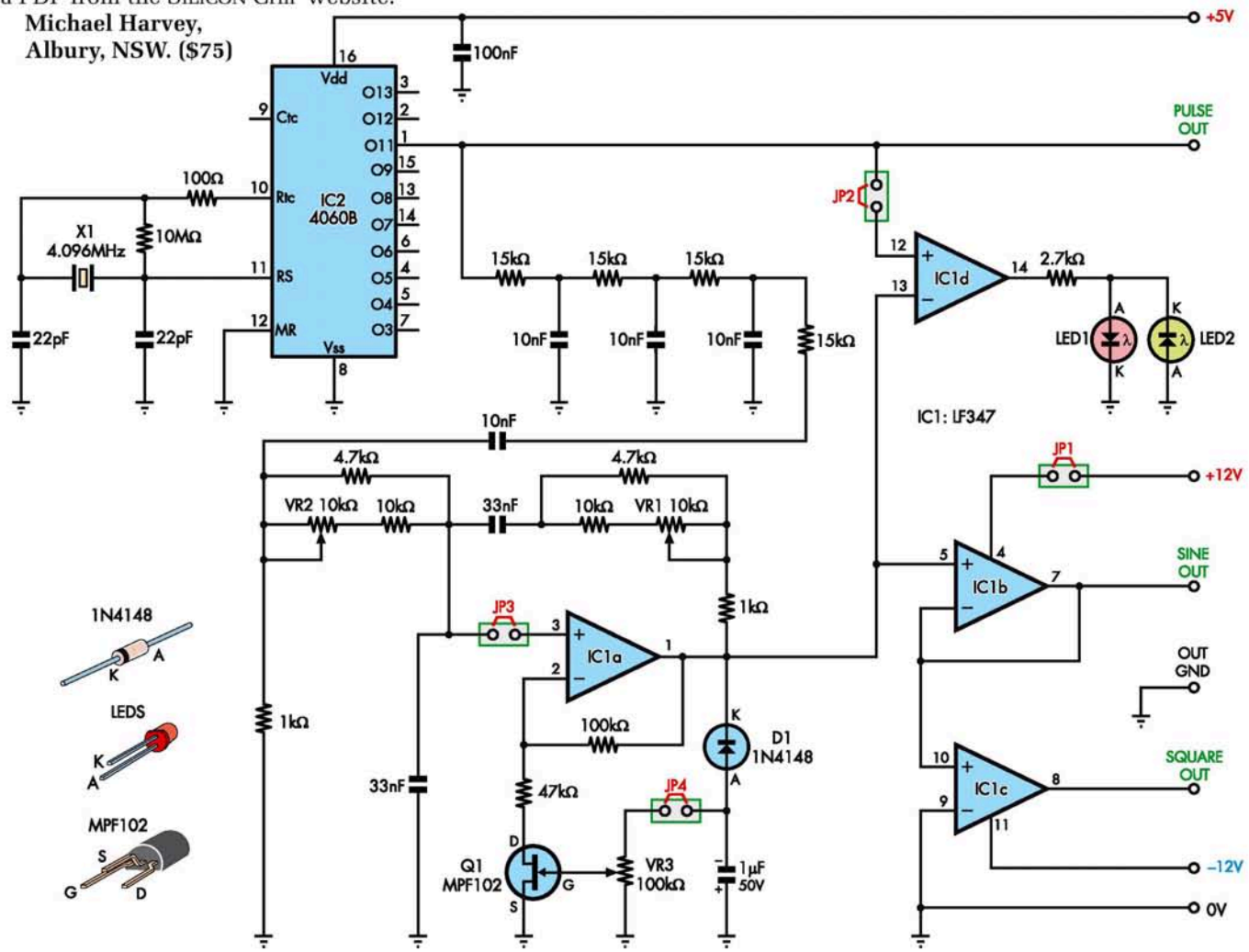

CRYSTAL LOCKED 1KHZ SINEWAVE OSCILLATOR

SILICON CHIP.com.au/shop ONLINESHOP

Looking for a specialised component to build that latest and greatest Silicon Chip project? Maybe it's the PCB you're after? Or a pre-programmed micro? Or some other hard-to-get "bit"? The chances are they are available direct from the Silicon Chip Online Shop.

- PCBs are normally IN STOCK and ready for despatch when that month's magazine goes on sale (you don't have to wait for them to be made!).
- Even if stock runs out (eg, for high demand), in most cases there will be no longer than a two-week wait.
- One low p&p charge: $10 per order, irregardless of how many items you order! (AUS only; overseas clients – check the website for a postage quote).
- Our PCBs are beautifully made, very high quality fibreglass boards with pre-tinned tracks, silk screen overlays and where applicable, solder masks.
- Best of all, subscribers receive a 10% discount on purchases! (Excluding subscription renewals and postage costs)

HERE'S HOW TO ORDER:

VISA MasterCard PayPal

All prices are in AUSTRALIAN DOLLARS ($AUD)

✔ **INTERNET** (24 hours, 7 days): Log on to our secure website – siliconchip.com.au, click on "SHOP" and follow the links

✔ **EMAIL** (24 hours, 7 days): email silicon@siliconchip.com.au – Clearly tell us what you want and include your contact and credit card details

✔ **MAIL** (24 hours, 7 days): PO Box 139, Collaroy NSW 2097. Clearly tell us what you want and include your contact and credit card details

✔ **PHONE** (9am-5pm AET, Mon-Fri): Call (02) 9939 3295 (INT +612 9939 3295) – have your order ready, including contact and payment details!

YES! You can also order or renew your Silicon Chip subscription via any of these methods as well!

PRE-PROGRAMMED MICROS

Micros cost from $10.00 to $20.00 each + $10 p&p per order#

$10 MICROS

PIC12F617-I/P	Temperature Switch Mk2 (June18), Recurring Event Reminder (Jul18) Door Alarm (Aug18), Steam Whistle (Sept18) White Noise Source / Tinnitus & Insomnia Killer (Sept18 / Nov18)
PIC12F675-I/P	UHF Remote Switch (Jan09), Ultrasonic Cleaner (Aug10) Ultrasonic Anti-fouling (Sep10), Cricket/Frog (Jun12), Do Not Disturb (May13) IR-to-UHF Converter (Jul13), UHF-to-IR Converter (Jul13) PC Birdies *2 chips – $15 pair* (Aug13), Driveway Monitor Receiver (July15) Hotel Safe Alarm (Jun16), 50A Battery Charger Controller (Nov16) Kelvin the Cricket (Oct17), Triac-based Mains Motor Speed Controller (Mar18) Heater Controller (Apr18), **Useless Box IC3 (Dec18)**
PIC12F675-E/P	Courtesy LED Light Delay for Cars (Oct14), Fan Speed Controller (Jan18)
PIC16F1455-I/P	Microbridge (May17), USB Flexitimer (June18), Digital Interface Module (Nov18)
PIC16F88-E/P	Hi Energy Ignition (Nov/Dec12), Speedo Corrector (Sept13) Auto Headlight Controller (Oct13), 10A 230V Motor Speed Controller (Feb14) Automotive Sensor Modifier (Dec16)
PIC16F88-I/P	Projector Speed (Apr11), Vox (Jun11), Ultrasonic Water Tank Level (Sep11) Quizzical (Oct11), Ultra LD Preamp (Nov11), 10-Channel Remote Control Receiver (Jun13), Revised 10-Channel Remote Control Receiver (Jul13) Nicad/NiMH Burp Charger (Mar14), Remote Mains Timer (Nov14) Driveway Monitor Transmitter (July15), Fingerprint Scanner (Nov15) MPPT Lighting Charge Controller (Feb16), 50/60Hz Turntable Driver (May16) Cyclic Pump Timer (Sep16), 60V 40A DC Motor Speed Controller (Jan17) Pool Lap Counter (Mar17), Rapidbrake (Jul17), Deluxe Frequency Switch (May18) **Useless Box IC1 (Dec18)**
PIC16LF88-I/P	Garbage Reminder (Jan13), Bellbird (Dec13), GPS Analog Clock Driver (Feb17)
PIC16LF1709-I/SO	Battery Cell Balancer (Mar16)

$15 MICROS

PIC16F1459-I/SO	**Four-Channel DC Fan & Pump Controller (Dec18)**
PIC16F84A-20I/P	Programmable Ignition Timing Module (Jun99), Fuel Mixture Display (Sept00) Oscar Naughts And Crosses (Oct07), UV Lightbox Timer (Nov07)
PIC16F877A-I/P	6-Digit GPS Clock (May-Jun09), 16-bit Digital Pot (Jul10), Semtest (Feb-May12)
PIC16F2550-I/SP	Batt Capacity Meter (Jun09), Intelligent Fan Controller (Jul10)
PIC18F4550-I/P	Multi-Purpose Car Scrolling Display (Dec08), GPS Car Computer (Jan10)
PIC32MM0256GPM028-I/SS	Super Digital Sound Effects (Aug18)
PIC32MX170F256B-50I/SP	GPS Tracker (Nov13), Micromite ASCII Video Terminal (Jul14) Micromite Mk2 (Jan15) + 47µF, Low Frequency Distortion Analyser (Apr15) Micromite LCD BackPack [either version] (Feb16), GPS Boat Computer (Apr16) Micromite Super Clock (Jul16), Touchscreen Voltage/Current Ref (Oct-Dec16) Micromite LCD BackPack V2 (May17), Deluxe eFuse (Aug17) Micromite DDS for IF Alignment (Sept17), Tariff Clock (Jul18) GPS-Synched Frequency Reference (Nov18)
PIC32MX795F512H-80I/PT	Maximite (Mar11), miniMaximite (Nov11), Colour Maximite (Sept/Oct12) Touchscreen Audio Recorder (Jun/Jul 14)
dsPIC33FJ64MC802-E/SP	Induction Motor Speed Controller (revised) (Aug13)

$20 MICROS

PIC32MX470F512H-I/PT	Stereo Audio Delay/DSP (Nov13), Stereo Echo/Reverb (Feb 14) Digital Effects Unit (Oct14)
PIC32MX470F512H-120/PT	Micromite PLUS Explore 64 (Aug 16), Micromite Plus LCD BackPack (Nov16)
PIC32MX470F512L-120/PT	Micromite PLUS Explore 100 (Sep-Oct16)
dsPIC33FJ128GP802-I/SP	Digital Audio Signal Generator (Mar-May10), Digital Lighting Cont. (Oct-Dec10) SportSync (May11), Digital Audio Delay (Dec11) Quizzical (Oct11), Ultra-LD Preamp (Nov11), LED Musicolor (Nov12)

When ordering, be sure to select BOTH the micro required AND the project for which it must be programmed.

SPECIALISED COMPONENTS, HARD-TO-GET BITS, ETC

P&P – $10 Per order#

LED CHRISTMAS TREE COMPLETE KIT *(NOV 18)*
PCB and all on-board parts, discounted if buying in bulk. Provided with three high-brightness green, red and white LEDS. Extra 220Ω and 820Ω are included to better match the red and white LEDs respectively.
1 ⇨ $10.00 ~ 4 ⇨ $32.00 ~ 18 ⇨ $126.00 ~ 31 ⇨ $199.00 ~ 38 ⇨ $229.00

DIGITAL INTERFACE MODULE KIT *(NOV 18)*
Includes PCB, programmed micro and all other required onboard components **$15.00**

GPS-SYNCHED FREQUENCY REFERENCE SMD PARTS *(NOV 18)*
Includes PCB and all SMD parts required **$80.00**

STEAM WHISTLE / DIESEL HORN *(SEPT 18)*
Set of two programmed PIC12F617-I/P micros **$15.00**

SUPER DIGITAL SOUND EFFECTS KIT *(AUG 18)*
PCB and all onboard parts (including optional ones) but no SD card, cell or battery holder **$40.00**

RECURRING EVENT REMINDER PCB+PIC BUNDLE *(JUL 18)*
PCB and programmed micro for a discount price **$15.00**

USB PORT PROTECTOR COMPLETE KIT *(MAY 18)*
All parts including the PCB and a length of clear heatshrink tubing **$15.00**

AM RADIO TRANSMITTER *(MAR 18)*
MC1496P double-balanced mixer IC (DIP-14) **$2.50**

VINTAGE TV A/V MODULATOR *(MAR 18)*
MC1374P A/V modulator IC (DIP-14) **$5.00**
SBK-71K coil former pack **(two required)** **$5.00 ea.**

PARTS FOR THE 6GHz+ TOUCHSCREEN FREQUENCY COUNTER *(OCT 17)*
Explore 100 kit (Cat SC3834; no LCD included) **$69.90**
one ERA-2SM+ & one ADCH-80A+ (Cat SC1167; two packs required) **$15.00/pk.**

MICROBRIDGE COMPLETE KIT (CAT SC4264) *(MAY 17)*
PCB plus all on-board parts including programmed microcontroller (SMD ceramics for 10µF) **$20.00**

STATIONMASTER (CAT SC4187) *(MAR 17)*
Hard to get parts: DRV8871 IC, SMD 1µF capacitor and 100kΩ potentiometer with detent **$12.50**

MICROMITE LCD BACKPACK V2 – COMPLETE KIT (CAT SC4237) *(MAY 17)*
includes PCB, programmed micro, touchscreen LCD, laser-cut UB3 lid, mounting hardware, SMD Mosfets for PWM backlight control and all other on-board parts **$70.00**

ULTRA LOW VOLTAGE LED FLASHER (CAT SC4125) *(FEB 17)*
kit including PCB and all SMD parts, LDR and blue LED **$12.50**

SC200 AMPLIFIER MODULE (CAT SC4140) *(JAN 17)*
hard-to-get parts: Q8-Q16, D2-D4, 150pF/250V capacitor and five SMD resistors **$35.00**

VARIOUS MODULES & PARTS

LM4865MX amplifier IC & LF50CV regulator (Tinnitus/Insomnia Killer, NOV18)	$10.00
2.8-inch touchscreen LCD module with SD card socket (Tide Clock, JUL18)	$22.50
ESP-01 WiFi Module (El Cheapo Modules, Part 15, APR18)	$5.00
WiFi Antennas with U.FL/IPX connectors (Water Tank Level Meter with WiFi, FEB18): 5dBi – $12.50 ~ 2dBi (omnidirectional) – $10.00	
NRF24L01+PA+NA transceiver with SNA connector and antenna (El Cheapo 12, JAN18)	$5.00
WeMos D1 Arduino-compatible boards with WiFi (SEPT17, FEB18): ThingSpeak data logger – $10.00 ~ WiFi Tank Level Meter (ext. antenna socket) – $15.00	
Geeetech Arduino MP3 shield (Arduino Music Player/Recorder, VS1053, JUL17)	$20.00
1nF 1% MKP (5mm lead spacing) or ceramic capacitor (Wide-Range LC Meter, JUN18)	$2.50
MAX7219 LED controller boards (El Cheapo Modules, Part 7, JUN17): 8x8 red SMD/DIP matrix display – $5.00 ~ red 8-digit 7-segment display – $7.50	
AD9833 DDS module (with gain control) (for Micromite DDS, APR17)	$25.00
AD9833 DDS module (no gain control) (El Cheapo Modules, Part 6, APR17)	$15.00
CP2102 USB-UART bridge	$5.00
microSD card adaptor (El Cheapo Modules, Part 3, JAN17)	$2.50
DS3231 real-time clock with mounting spacers and screws (El Cheapo, Part 1, OCT16)	$5.00

MICROMITE PLUS EXPLORE 100 COMPLETE KIT (no LCD panel) *(SEP 16)*
(includes PCB, programmed micro and the hard-to-get bits including female headers, USB and microSD sockets, crystal, etc but does not include the LCD panel) (Cat SC3834) **$69.90**

THESE ARE ONLY THE MOST RECENT MICROS AND SPECIALISED COMPONENTS. FOR THE FULL LIST, SEE www.siliconchip.com.au/shop

*All items subect to availability. Prices valid for month of magazine issue only. All prices in Australian dollars and include GST where applicable. **# P&P prices are within Australia. O'seas? Please email for a quote**

PRINTED CIRCUIT BOARDS

NOTE: The listings below are for the PCB ONLY. If you want a kit, check our store or contact the kit suppliers advertising in this issue. For unusual projects where kits are not available, some have specialised components available – see the list opposite.

NOTE: Not all PCBs are shown here due to space limits but the SILICON CHIP Online Shop has boards going back to 2001 and beyond. For a complete list of available PCBs etc, go to siliconchip.com.au/shop/8 Prices are PCBs only, NOT COMPLETE KITS!

PRINTED CIRCUIT BOARD TO SUIT PROJECT:	PUBLISHED:	PCB CODE:	Price:
Li'l PULSER MK2 REVISED	JAN 2014	09107134	$15.00
10A 230VAC MOTOR SPEED CONTROLLER	FEB 2014	10102141	$12.50
NICAD/NIMH BURP CHARGER	MAR 2014	14103141	$15.00
RUBIDIUM FREQ. STANDARD BREAKOUT BOARD	APR 2014	04105141	$10.00
USB/RS232C ADAPTOR	APR 2014	07103141	$5.00
MAINS FAN SPEED CONTROLLER	MAY 2014	10104141	$10.00
RGB LED STRIP DRIVER	MAY 2014	16105141	$10.00
HYBRID BENCH SUPPLY	MAY 2014	18104141	$20.00
2-WAY PASSIVE LOUDSPEAKER CROSSOVER	JUN 2014	01205141	$20.00
TOUCHSCREEN AUDIO RECORDER	JUL 2014	01105141	$12.50
THRESHOLD VOLTAGE SWITCH	JUL 2014	99106141	$10.00
MICROMITE ASCII VIDEO TERMINAL	JUL 2014	24107141	$7.50
FREQUENCY COUNTER ADD-ON	JUL 2014	04105141a/b	$15.00
TEMPMASTER MK3	AUG 2014	21108141	$15.00
44-PIN MICROMITE	AUG 2014	24108141	$5.00
OPTO-THEREMIN MAIN BOARD	SEP 2014	23108141	$15.00
OPTO-THEREMIN PROXIMITY SENSOR BOARD	SEP 2014	23108142	$5.00
ACTIVE DIFFERENTIAL PROBE BOARDS	SEP 2014	04107141/2	$10.00/set
MINI-D AMPLIFIER	SEP 2014	01110141	$5.00
COURTESY LIGHT DELAY	OCT 2014	05109141	$7.50
DIRECT INJECTION (D-I) BOX	OCT 2014	23109141	$5.00
DIGITAL EFFECTS UNIT	OCT 2014	01110131	$15.00
DUAL PHANTOM POWER SUPPLY	NOV 2014	18112141	$10.00
REMOTE MAINS TIMER	NOV 2014	19112141	$10.00
REMOTE MAINS TIMER PANEL/LID (BLUE)	NOV 2014	19112142	$15.00
ONE-CHIP AMPLIFIER	NOV 2014	01109141	$5.00
TDR DONGLE	DEC 2014	04112141	$5.00
MULTISPARK CDI FOR PERFORMANCE VEHICLES	DEC 2014	05112141	$10.00
CURRAWONG STEREO VALVE AMPLIFIER MAIN BOARD	DEC 2014	01111141	$50.00
CURRAWONG REMOTE CONTROL BOARD	DEC 2014	01111144	$5.00
CURRAWONG FRONT & REAR PANELS	DEC 2014	01111142/3	$30.00/set
CURRAWONG CLEAR ACRYLIC COVER	JAN 2015	SC2892	$25.00
ISOLATED HIGH VOLTAGE PROBE	JAN 2015	04108141	$10.00
SPARK ENERGY METER MAIN BOARD	FEB/MAR 2015	05101151	$10.00
SPARK ENERGY ZENER BOARD	FEB/MAR 2015	05101152	$10.00
SPARK ENERGY METER CALIBRATOR BOARD	FEB/MAR 2015	05101153	$5.00
APPLIANCE INSULATION TESTER	APR 2015	04103151	$10.00
APPLIANCE INSULATION TESTER FRONT PANEL	APR 2015	04103152	$10.00
LOW-FREQUENCY DISTORTION ANALYSER	APR 2015	04104151	$5.00
APPLIANCE EARTH LEAKAGE TESTER PCBs (2)	MAY 2015	04203151/2	$15.00
APPLIANCE EARTH LEAKAGE TESTER LID/PANEL	MAY 2015	04203153	$15.00
BALANCED INPUT ATTENUATOR MAIN PCB	MAY 2015	04105151	$15.00
BALANCED INPUT ATTENUATOR FRONT & REAR PANELS	MAY 2015	04105152/3	$20.00
4-OUTPUT UNIVERSAL ADJUSTABLE REGULATOR	MAY 2015	18105151	$5.00
SIGNAL INJECTOR & TRACER	JUNE 2015	04106151	$7.50
PASSIVE RF PROBE	JUNE 2015	04106152	$2.50
SIGNAL INJECTOR & TRACER SHIELD	JUNE 2015	04106153	$5.00
BAD VIBES INFRASOUND SNOOPER	JUNE 2015	04104151	$5.00
CHAMPION + PRE-CHAMPION	JUNE 2015	01109121/2	$7.50
DRIVEWAY MONITOR TRANSMITTER PCB	JULY 2015	15105151	$10.00
DRIVEWAY MONITOR RECEIVER PCB	JULY 2015	15105152	$5.00
MINI USB SWITCHMODE REGULATOR	JULY 2015	18107151	$2.50
VOLTAGE/RESISTANCE/CURRENT REFERENCE	AUG 2015	04108151	$2.50
LED PARTY STROBE MK2	AUG 2015	16101141	$7.50
ULTRA-LD MK4 200W AMPLIFIER MODULE	SEP 2015	01107151	$15.00
9-CHANNEL REMOTE CONTROL RECEIVER	SEP 2015	1510815	$15.00
MINI USB SWITCHMODE REGULATOR MK2	SEP 2015	18107152	$2.50
2-WAY PASSIVE LOUDSPEAKER CROSSOVER	OCT 2015	01205141	$20.00
ULTRA LD AMPLIFIER POWER SUPPLY	OCT 2015	01109111	$15.00
ARDUINO USB ELECTROCARDIOGRAPH	OCT 2015	07108151	$7.50
FINGERPRINT SCANNER – SET OF TWO PCBS	NOV 2015	03109151/2	$15.00
LOUDSPEAKER PROTECTOR	NOV 2015	01110151	$10.00
LED CLOCK	DEC 2015	19110151	$15.00
SPEECH TIMER	DEC 2015	19111151	$15.00
TURNTABLE STROBE	DEC 2015	04101161	$5.00
CALIBRATED TURNTABLE STROBOSCOPE ETCHED DISC	DEC 2015	04101162	$10.00
VALVE STEREO PREAMPLIFIER – PCB	JAN 2016	01101161	$15.00
VALVE STEREO PREAMPLIFIER – CASE PARTS	JAN 2016	01101162	$20.00
QUICKBRAKE BRAKE LIGHT SPEEDUP	JAN 2016	05102161	$15.00
SOLAR MPPT CHARGER & LIGHTING CONTROLLER	FEB/MAR 2016	16101161	$15.00
MICROMITE LCD BACKPACK, 2.4-INCH VERSION	FEB/MAR 2016	07102121	$7.50
MICROMITE LCD BACKPACK, 2.8-INCH VERSION	FEB/MAR 2016	07102122	$7.50
BATTERY CELL BALANCER	MAR 2016	11111151	$6.00
DELTA THROTTLE TIMER	MAR 2016	05102161	$15.00
MICROWAVE LEAKAGE DETECTOR	APR 2016	04103161	$5.00
FRIDGE/FREEZER ALARM	APR 2016	03104161	$5.00
ARDUINO MULTIFUNCTION MEASUREMENT	APR 2016	04116011/2	$15.00
PRECISION 50/60Hz TURNTABLE DRIVER	MAY 2016	04104161	$15.00
RASPBERRY PI TEMP SENSOR EXPANSION	MAY 2016	24104161	$5.00
100DB STEREO AUDIO LEVEL/VU METER	JUN 2016	01104161	$15.00
HOTEL SAFE ALARM	JUN 2016	03106161	$5.00
UNIVERSAL TEMPERATURE ALARM	JULY 2016	03105161	$5.00
BROWNOUT PROTECTOR MK2	JULY 2016	10107161	$10.00
8-DIGIT FREQUENCY METER	AUG 2016	04105161	$10.00
APPLIANCE ENERGY METER	AUG 2016	04116061	$15.00
MICROMITE PLUS EXPLORE 64	AUG 2016	07108161	$5.00
CYCLIC PUMP/MAINS TIMER	SEPT 2016	10108161/2	$10.00/pair
MICROMITE PLUS EXPLORE 100 (4 layer)	SEPT 2016	07109161	$20.00
AUTOMOTIVE FAULT DETECTOR	SEPT 2016	05109161	$10.00
MOSQUITO LURE	OCT 2016	25110161	$5.00
MICROPOWER LED FLASHER	OCT 2016	16109161	$5.00
MINI MICROPOWER LED FLASHER	OCT 2016	16109162	$2.50
50A BATTERY CHARGER CONTROLLER	NOV 2016	11111161	$10.00
PASSIVE LINE TO PHONO INPUT CONVERTER	NOV 2016	01111161	$5.00
MICROMITE PLUS LCD BACKPACK	NOV 2016	07110161	$7.50
AUTOMOTIVE SENSOR MODIFIER	DEC 2016	05111161	$10.00
TOUCHSCREEN VOLTAGE/CURRENT REFERENCE	DEC 2016	04110161	$12.50
SC200 AMPLIFIER MODULE	JAN 2017	01108161	$10.00
60V 40A DC MOTOR SPEED CON. CONTROL BOARD	JAN 2017	11112161	$10.00
60V 40A DC MOTOR SPEED CON. MOSFET BOARD	JAN 2017	11112162	$12.50
GPS SYNCHRONISED ANALOG CLOCK	FEB 2017	04202171	$10.00
ULTRA LOW VOLTAGE LED FLASHER	FEB 2017	16110161	$2.50
POOL LAP COUNTER	MAR 2017	19102171	$15.00
STATIONMASTER TRAIN CONTROLLER	MAR 2017	09103171/2	$15.00/set
EFUSE	APR 2017	04102171	$7.50
SPRING REVERB	APR 2017	01104171	$12.50
6GHz+ 1000:1 PRESCALER	MAY 2017	04112162	$7.50
MICROBRIDGE	MAY 2017	24104171	$2.50
MICROMITE LCD BACKPACK V2	MAY 2017	07104171	$7.50
10-OCTAVE STEREO GRAPHIC EQUALISER PCB	JUN 2017	01105171	$12.50
10-OCTAVE STEREO GRAPHIC EQUALISER FRONT PANEL	JUN 2017	01105172	$15.00
10-OCTAVE STEREO GRAPHIC EQUALISER CASE PIECES	JUN 2017	SC4281	$15.00
RAPIDBRAKE	JUL 2017	05105171	$10.00
DELUXE EFUSE	AUG 2017	18106171	$15.00
DELUXE EFUSE UB1 LID	AUG 2017	SC4316	$5.00
MAINS SUPPLY FOR BATTERY VALVES (INC. PANELS)	AUG 2017	18108171-4	$25.00
3-WAY ADJUSTABLE ACTIVE CROSSOVER	SEPT 2017	01108171	$20.00
3-WAY ADJUSTABLE ACTIVE CROSSOVER PANELS	SEPT 2017	01108172/3	$20.00/pair
3-WAY ADJUSTABLE ACTIVE CROSSOVER CASE PIECES	SEPT 2017	SC4403	$10.00
6GHz+ TOUCHSCREEN FREQUENCY COUNTER	OCT 2017	04110171	$10.00
KELVIN THE CRICKET	OCT 2017	08109171	$10.00
6GHz+ FREQUENCY COUNTER CASE PIECES (SET)	DEC 2017	SC4444	$15.00
SUPER-7 SUPERHET AM RADIO PCB	DEC 2017	06111171	$25.00
SUPER-7 SUPERHET AM RADIO CASE PIECES	DEC 2017	SC4464	$25.00
THEREMIN	JAN 2018	23112171	$12.50
PROPORTIONAL FAN SPEED CONTROLLER	JAN 2018	05111171	$2.50
WATER TANK LEVEL METER (INCLUDING HEADERS)	FEB 2018	21110171	$7.50
10-LED BARAGRAPH	FEB 2018	04101181	$7.50
10-LED BARAGRAPH SIGNAL PROCESSING	FEB 2018	04101182	$5.00
TRIAC-BASED MAINS MOTOR SPEED CONTROLLER	MAR 2018	10102181	$10.00
VINTAGE TV A/V MODULATOR	MAR 2018	02104181	$7.50
AM RADIO TRANSMITTER	MAR 2018	06101181	$7.50
HEATER CONTROLLER	APR 2018	10104181	$10.00
DELUXE FREQUENCY SWITCH	MAY 2018	05104181	$7.50
USB PORT PROTECTOR	MAY 2018	07105181	$2.50
2 x 12V BATTERY BALANCER	MAY 2018	14106181	$2.50
USB FLEXITIMER	JUNE 2018	19106181	$7.50
WIDE-RANGE LC METER	JUNE 2018	04106181	$5.00
WIDE-RANGE LC METER (INCLUDING HEADERS)	JUNE 2018	SC4618	$7.50
WIDE-RANGE LC METER CLEAR CASE PIECES	JUNE 2018	SC4609	$7.50
TEMPERATURE SWITCH MK2	JUNE 2018	05105181	$7.50
LiFePO4 UPS CONTROL SHIELD	JUNE 2018	11106181	$5.00
RASPBERRY PI TOUCHSCREEN ADAPTOR (TIDE CLOCK)	JULY 2018	24108181	$5.00
RECURRING EVENT REMINDER	JULY 2018	19107181	$5.00
BRAINWAVE MONITOR (EEG)	AUG 2018	25107181	$10.00
SUPER DIGITAL SOUND EFFECTS	AUG 2018	01107181	$2.50
DOOR ALARM	AUG 2018	03107181	$5.00
STEAM WHISTLE / DIESEL HORN	SEPT 2018	09106181	$5.00
DCC PROGRAMMER	OCT 2018	09107181	$5.00
DCC PROGRAMMER (INCLUDING HEADERS)	OCT 2018	09107181	$7.50
OPTO-ISOLATED RELAY (WITH EXTENSION BOARDS)	OCT 2018	10107181/2	$7.50
GPS-SYNCHED FREQUENCY REFERENCE	NOV 2018	04107181	$7.50
1 x LED CHRISTMAS TREE	NOV 2018	16107181	$5.00
4 x LED CHRISTMAS TREE			$18.00
18 x LED CHRISTMAS TREE			$72.00
31 x LED CHRISTMAS TREE			$120.00
38 x LED CHRISTMAS TREE			$145.00
DIGITAL INTERFACE MODULE	NOV 2018	16107182	$2.50
TINNITUS/INSOMNIA KILLER (JAYCAR VERSION)	NOV 2018	01110181	$5.00
TINNITUS/INSOMNIA KILLER (ALTRONICS VERSION)	NOV 2018	01110182	$5.00

NEW PCBs

HIGH-SENSITIVITY MAGNETOMETER	DEC 2018	04101011	$12.50
USELESS BOX	DEC 2018	08111181	$7.50
FOUR-CHANNEL DC FAN & PUMP CONTROLLER	DEC 2018	05108181	$5.00

WE ALSO SELL AN A2 REACTANCE WALLCHART, RADIO, TV & HOBBIES DVD PLUS VARIOUS BOOKs IN THE "Books, DVDs, etc" PAGE AT SILICONCHIP.COM.AU/SHOP/3

Four-channel High-current DC Fan and Pump Motor Controller – Part II

by Nicholas Vinen

In the October 2018 issue, we revealed our new high-current fan and pump controller, able to switch up to 40A total with a 12V nominal supply, controlling up to four loads using the readings from between one and four temperature sensors. And it's programmed over USB, to make the many different settings easy to control. In this second part, we cover PCB assembly, wiring it all up and adjusting those settings to suit your installation.

One of the main goals with this new DC Fan Controller was to provide many different options to suit different situations, without making it a nightmare to configure. We certainly couldn't use jumpers and trimpots because there would be just too many and it would be too hard to make any changes once the unit was mounted in a vehicle.

So instead, we have made the unit configurable and controllable over a USB text interface. Unfortunately, the low-power micro we've chosen doesn't have a great deal of memory but we've come up with a way to provide a friendly user interface that allows you to see the exact settings and make changes via a laptop or desktop PC.

Basically, you view and change your settings via a web page which then produces a "magic string" of text which, when pasted into the Fan Controller's terminal, changes its behaviour to match up what you have entered on the web page.

So if you aren't happy with the way your fans and/or pumps are being operated, it's a simple matter to reach the accessible USB plug or socket you've fitted, connect it to your PC and upload a new configuration. You can even test it without having to take the vehicle out on the road, simulating battery voltage and changes and temperature sensor changes to see what happens.

The PCB itself has been made reasonably compact to make fitting it inside the vehicle easier, by using mostly SMD parts. Despite this, it's a bit larger than our last solo Fan Controller (January 2018), so you'll need a bigger box and it's a bit trickier to find somewhere to fit. But we did find a good location in the packed engine bay of our test vehicle and the wiring is pretty easy, once you've purchased appropriate connectors and gotten the hang of soldering them.

And anyway, it's heaps more capable and configurable, so the small penalty in size is well worth it.

PCB construction

The Fan Controller is built on a PCB coded 05108181,

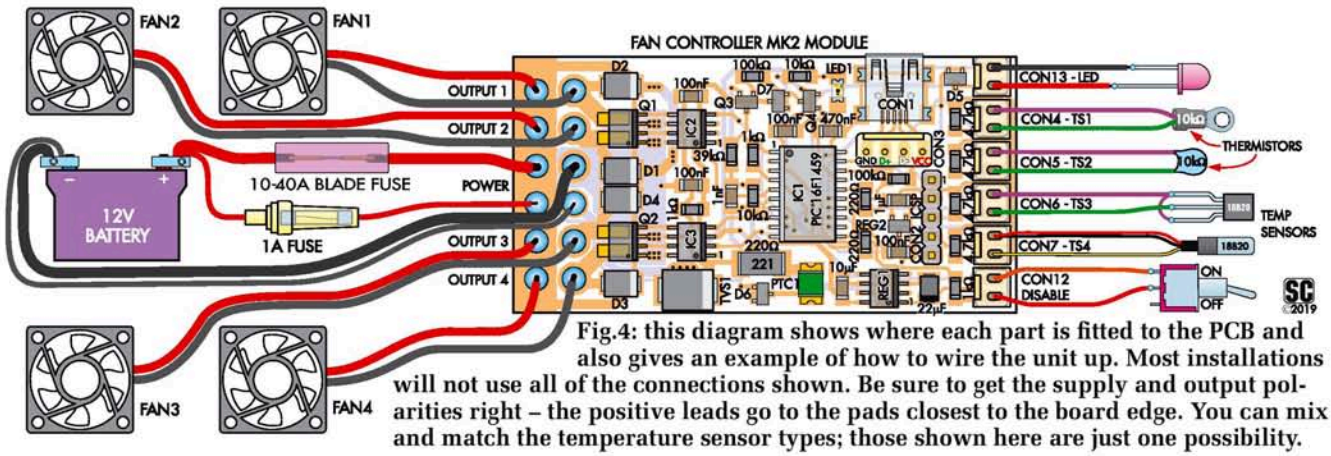

Fig.4: this diagram shows where each part is fitted to the PCB and also gives an example of how to wire the unit up. Most installations will not use all of the connections shown. Be sure to get the supply and output polarities right – the positive leads go to the pads closest to the board edge. You can mix and match the temperature sensor types; those shown here are just one possibility.

which measures 68 x 34.5mm. All the components are mounted on the top side. Use the PCB overlay diagram, Fig.4, as a guide during assembly.

If you are fitting onboard USB socket CON1, start with that. Spread a thin smear of flux paste on its four mounting pads and five signal pins, then drop the socket on the board and move it around until the two plastic posts on the underside drop into the alignment holes. You should find its five pins are then positioned over the pads.

Nudge it a little if necessary, to get the alignment perfect. Then apply solder to one of the four large pads which attach its "feet". You will need to apply a fair bit of heat and some extra solder to get a good, solid joint. Re-check the signal pin positions and if necessary, reheat that solder joint and carefully nudge the part without lifting it up. It may be hot, so use caution.

Once you're happy with the position of the signal pins, solder the other three mounting feet, then apply a small amount of solder to those pins. If you load some solder onto the tip of your iron and touch it to the end of the pin (which is partially hidden under the body), the flux paste you applied earlier should help to 'suck' the solder off the iron and onto the pin and pad.

Repeat this for the other four signal pins and carefully examine them under a magnifier with good light, to ensure a good joint has formed and there are no bridges between pins. If there are bridges, apply a little extra flux paste and then use solder wick and heat from the iron to remove them.

Next, move onto microcontroller IC1. It is in a wide SOIC package with relatively large pin spacings, so it is not difficult to solder. First, find its pin 1 dot and make sure that it is orientated as shown in Fig.4. Also, check that it is sitting flat on the board, then tack solder one of its corner pins. It's easier to solder if you spread a small amount of flux paste on all its pads first.

Make sure all the pins are correctly aligned on their pads. If not, heat that initial solder joint and gently nudge it into position. Repeat until you are happy that they are all lined up, then solder the remaining pins and finally, add a little extra solder to the first pin to refresh the joint. Inspect the joints and as before, if you find any bridges, clean them up with flux paste and solder wick.

Now you can proceed to solder IC2, IC3 and REG1 similarly, as they are all in smaller SOIC packages. Note though that their pin 1 dot is orientated differently to IC1. Check the orientation carefully against what is shown in Fig.4 before soldering each chip.

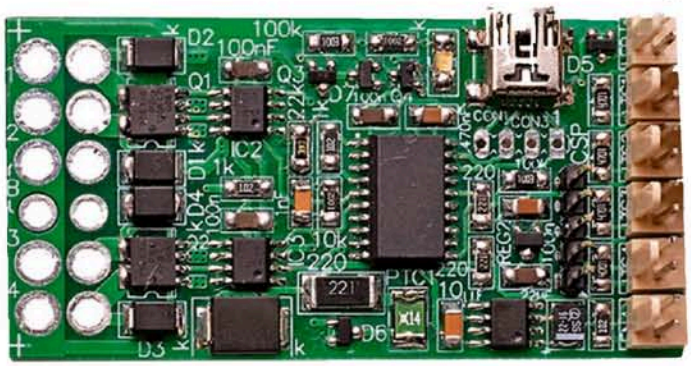

The completed motor/pump controller is shown here slightly oversize for clarity (actual PCB size is 68mm wide – as seen above). Yes, it is all SMD components so a good eye, a steady hand and a fine-tipped iron are all required.

Mosfets Q1 and Q2 should be fitted next. These are in a similar package to IC2, IC3 and REG1 except that the pairs of pins on one side are joined together. So we have provided larger pads to solder those pairs of pins to the board. Again, check that the pin 1 dot is orientated correctly – the same as IC2 and IC3 – before soldering them in place.

These are seven small three-pin SOT-23 package pards on the board: Q3, Q4, D5-D7 and REG2. They look similar so don't get them mixed up. Their pins are widely spaced, so they are pretty easy to solder. Use the same technique as with the ICs; it's generally easier to tack the pin that's all by itself on one side first, then solder the other two pins and refresh the first solder joint last.

Now fit the smaller (3216/1206-size) resistors and capacitors. The required values and positions are shown in Fig.4. They are not polarised, so orientation is not important. The resistors will be printed with a 3-digit or 4-digit code on the top to indicate their value, while the ceramic capacitors will be unmarked so be careful not to mix them up.

It's the same basic method – tack one end, check the positioning and then solder the opposite side and go back and refresh the first joint.

Besides making sure the parts are flat on the board and that the solder joints are made properly, the main trick is to be patient and wait several seconds between soldering one side of the part and the other. This gives the joint time to solidify. Otherwise, the part will tend to move out of position when you touch it with the iron.

You can now fit PTC1 and the large 220Ω resistor next to it, using the same basic technique. Keep in mind that these larger parts will require a bit more heat and solder to form good joints. Neither of these components are polarised.

The diodes are also two-terminal devices and can be soldered in the same manner as the passives but are larger again so they will also need a bit more heat. Fit diodes D1-D4 now, ensuring that their cathode stripe faces towards the right side, ie, into the middle of the board. You can also fit TVS1 now; it's larger again but otherwise is similar to the other diodes.

The last remaining SMD component is the 22µF tantalum capacitor next to REG1. It is also polarised and must be soldered with its positive end (generally marked with a stripe) towards the bottom edge of the board.

You can now move on to fit the headers that you require for your application. You will need at least one of the four temperature sensor headers (CON4-CON7); we recommend that you fit all four, even if you aren't planning to use them, in case you want to add more sensors later.

You can also fit CON12 and/or CON13 now, for the enable/disable control and indicator LED. Again, you may want to fit them even if you aren't planning to use them, in case you change your mind later.

Parts list – Fan/Pump Controller

for sample installation with one fan and three temperature sensors (change to suit yours)

- 1 DC Fan/Pump Controller PCB Mk2, fully assembled
- 1 IP65-rated sealed high-temperature ABS box, 15x65x40mm [Jaycar Cat HB6122]
- 1 USB mini-B to type-A cable
- 2 30A waterproof blade fuse holders with LED [Jaycar Cat SZ2042]
- 1 1A blade fuse [Jaycar Cat SF2126]
- 1 20A blade fuse [Jaycar Cat SF2138]
- 2 6mm non-insulated eye terminals [Jaycar Cat PT4934]
- 1 4-way Deutsch waterproof plug/socket set [Jaycar Cat PP2149]
- 1 2-way Narva-style waterproof plug/socket set [Jaycar Cat PP2110]
- 1 4-way Narva-style waterproof plug/socket set [Jaycar Cat PP2114]
- 1 2-way 250-series automotive socket (to suit radiator fan) Jaycar Cat PP2062]
- 1 1m length 2-core 7.5A automotive cable [Jaycat Cat WH3057]
- 1 1m length 2-core 15A automotive cable [Jaycar Cat WH3079]
- 1 1m length 2-core 25A tinned automotive cable [Jaycar Cat WH3087]
- 1 1m length 25A black tinned automotive cable [Jaycar Cat WH3082]
- 1 1.2m length 10mm diameter clear heatshrink tubing [Jaycar Cat WH5555]
- 2 DS18B20 digital temperature sensors in waterproof housings [Silicon Chip cat SC3359]
- 1 10kΩ lug-mount NTC thermistor [Altronics Cat R4112]
- 3 2-pin polarised headers, 2.54mm pitch, with pins [Jaycar Cat HM3402]
- 2 M6 copper crinkle washers
- 2 M6 hex nuts

Planning the wiring

As mentioned in the first article (October 2018), rather than use connectors for the high-current wiring, we have simply provided large pads on the board, to which fairly thick wires can be soldered directly. While it is possible to use fixed cables, we suggest that you use in-line connectors on most or all of the wires.

This has a few advantages: it makes testing easier, it makes it easier to replace a sensor or fan later if you have to, it makes it easier to remove the unit in case you need to repair or reprogram the unit, and so on.

There are various suitable types of inline automotive connectors, many of which are waterproof. While waterproof connectors are not critical for the 12V supply wiring or connections to fans/pumps, we recommend that you use them for the sensors, enable/disable line and external LED wiring (if used) as water may conduct enough current to affect the function of those devices.

See the panel below for more details on suitable connectors that are available.

Having decided where you will have connectors and what type to use, you will then need to find a suitable location for the case that will house your PCB. We strongly suggest that you use an IP65 (or better) rated waterproof box.

You could use an ordinary plastic box and waterproof it with silicone but it will be hard to get it apart later if you need to.

We used a sealed ABS plastic box from Jaycar – see the additional parts list (at left) for details. Figure out where your box will fit in the vehicle and also how you will attach it. We used a screw through one of the box's two integral mounting holes, through a support member in the vehicle (which already had a hole in it) and into a piece of foam, capped off by a washer and a nut.

We also placed a thin piece of foam (with a hole in it) between the box and the cross member. This provides some vibration reduction compared to rigidly mounting it to the vehicle.

Now that you have a location for the box, you can measure the lengths of all the required cables.

The easiest way to measure how long a cable needs to be is to thread a spare piece of wire through the vehicle between the two points to be connected, loosely, then pinch the end in one hand, pull it out and measure its length. Remember that some parts of the car may flex or move, so don't make it too tight.

You will also need to calculate the minimum current rating for each. This will typically be 10-20A for fan cables and 10-40A for the battery cables. Just about any wire can be used for the sensor wiring, enable/disable switch, LED and battery voltage sense wiring, as these all carry mere milliamps.

When cutting the cables to length, remember to account for the length lost stripping both the inner and (where present) outer layers of insulation, plus a bit extra in case you damage the wire while stripping it and have to cut it off.

Having cut and stripped the insulation off the ends of all the various cables required, crimp and/or solder the connectors on. Leave the connectors that will plug into the PCB off for the moment.

Don't forget to make provision for some heatshrink tub-

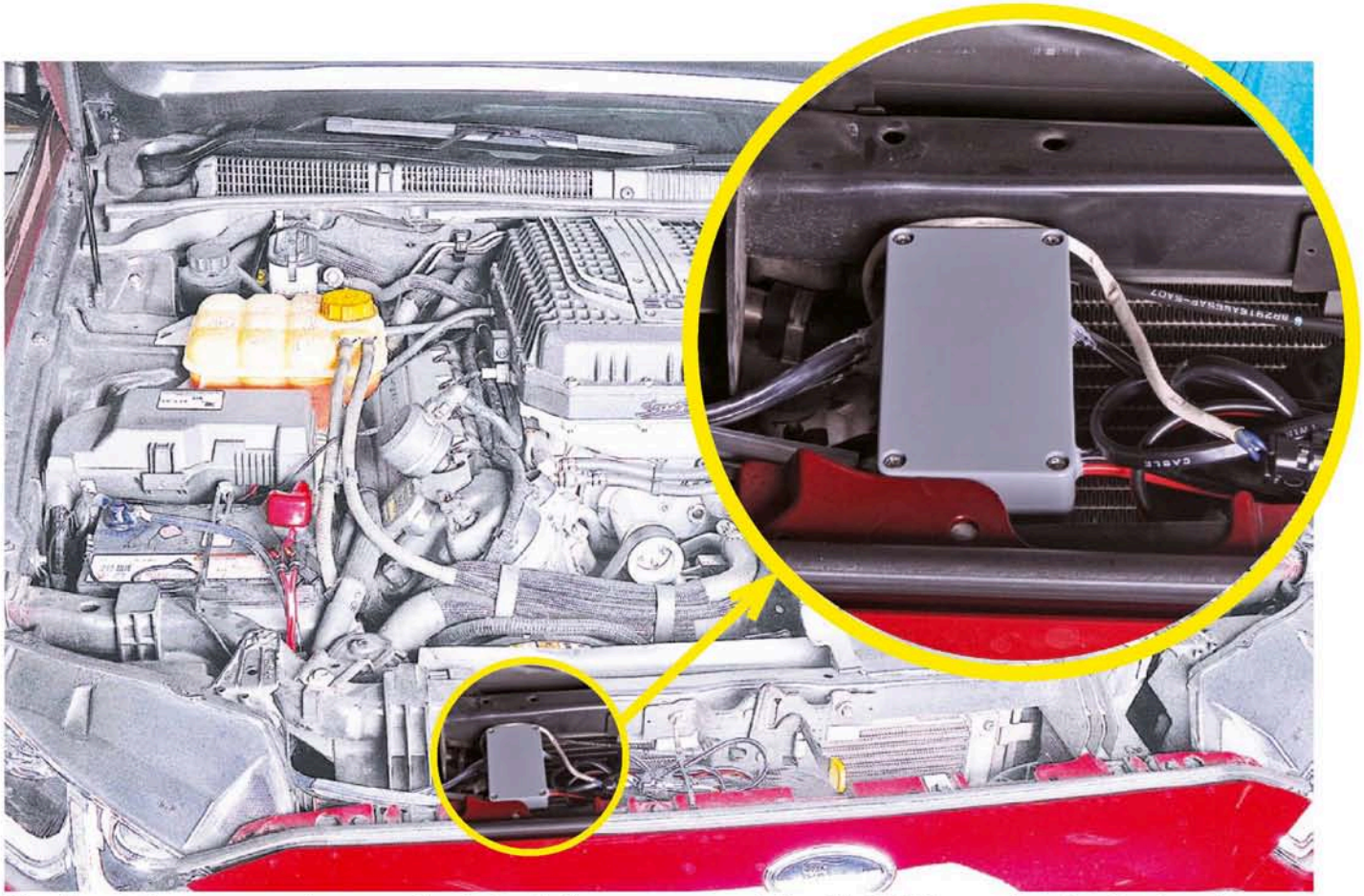

There's not a huge amount of space under the hood of many cars, especially a big V8! Choose a location that doesn't interfere with the operation of any other controls and, preferably, is easy to get to! Ensure all wiring is adequately secured.

ing for any multi-wire or multi-cable bundles, to keep everything neat when you run them later.

Configuration and testing

It's a good idea to test the unit before making the final connections since if you find any problems later, it will be harder to fix them if the unit is already captive in its case due to wires soldered directly to the board.

You will need to load it with its initial configuration. All you need to do this is a computer with a USB port and a serial terminal program such as Tera Term Pro (a free download from https://ttssh2.osdn.jp/index.html.en).

You also need an internet connection, although it doesn't necessarily need to be available at the same time that the computer is hooked up to the unit; you can prepare the configuration beforehand.

Start by plugging the finished board into your computer using either a Type-A to mini Type-B USB cable (if you fitted CON1) or a chassis-mounting Type-B socket wired into CON3, plus a suitable cable.

Check that your computer has detected a new USB serial device. That verifies that the microcontroller is working correctly. In Windows 10, you can do this by right-clicking on the Start button, choosing "Settings" from the menu that appears, then clicking on the Devices icon. You should see a device listed with a name like "USB Serial Port (COM5)". The COM number will vary.

Open this serial port using your chosen terminal emulator and then type "status" and press Enter. You should get a status display similar to that shown in Fig.6. If you don't, check your port settings (the baud rate setting and so on are not important).

If you can't get any response, you may have a wiring or hardware fault, so check that your USB socket is soldered and wired correctly, that the PIC chip (IC1) is properly programmed and soldered and that all associated components have been fitted correctly.

Once you've established communications with the chip, open a web browser and go to http://siliconchip.com.au/apps/DCFanMk2 This page will help you set up a basic configuration for the unit, for further testing.

See the panel on Settings for help on how to set the unit up initially. The web page referred to above translates your desired settings into an encoded string which you can send to the Fan/Pump controller, setting its configuration to the desired state. Read up on the basic settings now – you can ignore the more advanced settings for now.

You can read about them later, once you've established that everything is working.

Loading the configuration

Once you have selected all the options you want, click the "Copy to clipboard" button at the bottom of the window, then switch to your terminal program and paste the configuration string (which is now in the system clipboard) into the terminal. You can do this in Tera Term Pro by right-clicking in the terminal window, then pressing Enter.

You should get a response that says "OK". If it says "Error", then the clipboard string has somehow become corrupted.

Explanation of Settings

Basic Settings

The settings user interface (available at http://siliconchip.com.au/apps/DCFan-Mk2) is shown in Fig.5. Note that this has been revised slightly since the October article, to remove some unnecessary features and add some other useful ones. Start by using the top four drop-downs to select the type of temperature sensors you have hooked up to CON4-CON7.

The following three voltage thresholds control how the unit responds to changing battery voltages. The defaults are sensible, so you don't necessarily need to change them.

The first determines the voltage the battery needs to rise above before the unit will become active.

The second determines the voltage it must fall below when active to terminate normal operation and enter cool-down mode, an optional time during which the fans and/or pumps will continue to run, possibly with reduced duty cycles.

The third voltage threshold prevents cool-down mode from flattening the battery. If the battery voltage falls below this during cool-down mode, the unit will immediately go into sleep mode and wait for the battery voltage to rise above the switch-on threshold before becoming active again.

The cool-down delay is designed so that vehicles which charge the batteries sporadically will not enter cool-down straight away when the battery is no longer being charged. The battery voltage must be below the "Enter cool-down" threshold for this long before it will go into cool-down mode. For vehicles which continuously charge the battery, set this to a short time (eg, 1s).

The minimum cool-down on-time sets the minimum time that the unit must be in full operation before it goes into cool-down mode. If the battery voltage is above the threshold for a shorter time than this, the unit will immediately shut down instead.

The cool-down time is the maximum number of seconds that the unit will spend in cool-down mode before shutting down.

Cool-down compensation allows you to reduce the fan/pump duty cycles in cool-down mode, compared to what they would be during normal operation given the sensor temperatures. Upon entering cool-down mode, the duty cycles are immediately multiplied by the maximum value of this setting. So if that is 75%, they will drop by 25%. The minimum duty cycle setting for each output will still be in effect.

As the battery voltage drops towards the shut-down threshold, the duty cycle multiply value approaches the lower value of the setting. So with the default values, duty cycles will reduce from 75% of nominal to 25% of nominal before the unit shuts off completely.

Per-output settings

Each output has a similar configuration entry in the table beneath the global settings. You can enable or disable each output individually using the drop-downs at left. You can also set output #2 to be a slave to #1 so that the two outputs can be paralleled to give a single 20A output. The same comment applies for outputs #3 and #4.

The PWM frequency must be the same for outputs #1 and #2 and the range of possible frequencies is shown on-screen, along with the closest frequency to the one you have selected, which will be the actual frequency used. Note that the real frequency will also vary slightly depending on the micro's oscillator calibration.

The frequencies for outputs #3 and #4 can be set independently but only if one of them is 10Hz or less. The maximum frequency setting for these two inputs is 2kHz. Typically, you would only use two different frequencies if one of these outputs is controlling a pump and you want it to be driven with long pulses. In this case, you can choose a frequency as low as 1/10Hz (100mHz).

The duty cycle for the output is determined by three main parameters: the duty cycle range, the temperature range and the way the sensor data is combined. The lowest duty cycle in the range given will occur when the sensor reading is at the lowest temperature specified, and the highest duty cycle will occur when the sensor reading is at the highest temperature specified.

In other words, if you set the duty cycle range to 40-60% and the temperature range to 20-30°C, you will get a duty cycle of 40% at 20°C, 42% at 21°C, ... 58% at 29°C and 60% at 30°C.

In the simplest case, this temperature is derived from a single sensor. This is the default; you will find that initially, the duty cycle of output 1 is derived from TS1, of output 2 from TS2 and so on. But you can change this mapping. Multiple outputs can use the same sensor if desired.

The final setting we'll describe here is the ramp rate, which specifies the minimum number of milliseconds that it takes for the output duty cycle to change by 1%. So if you set this to, say, 100ms then a change from 0% to 100% duty cycle will take 10 seconds.

Advanced Settings

The Curve setting for each output allows you to compensate for loads where the speed/power is not directly proportional to voltage, linearising their speed to temperature relationship. For example, if you have a fan where speed is proportional to the cube of the average voltage across it, use the Cube Root setting to provide a more linear speed with temperature.

SVC stands for Supply Voltage Compensation and allows the duty cycle to be automatically dialled back as the battery voltage increases, providing a constant voltage/speed for a given input temperature. Simply specify the voltage at which you want this to take effect (eg, 12V). If the supply voltage is, say, 13V then the duty cycle will be reduced to 12/13 of nominal to give the same average voltage across the load.

Advanced temperature formulas

To the right of the sensor name, you will see a minus sign and then a drop-down box containing zero.

You can select a different number to offset the sensor reading or, more usefully, you can select a second temperature sensor to make a differential reading. The temperature settings you enter for "Temperature range" then refer to the difference between the two sensors.

Rather than using a single sensor on either side of the minus sign, you can instead change the blank dropdown in front of it to read "min" or "max" and this will let you select a second sensor.

The temperature used in the calculation will then be the lowest (min) or highest (max) of the two readings. Or you can make one of the values a constant; the temperature sensor reading will then be clamped when it goes below (min) or above (max) that value. That feature is most useful in the differential sensing mode.

So effectively, you can build a simple formula to derive the temperature reading from up to four sensors, rather than just using the temperature from one sensor directly.

There is one additional option; you can actually have TWO such formulas, using the same structure (but they can be different).

The unit will calculate both values and then the result will be either the lowest (min), highest (max) or average (avg) of the result. That gives you a further way to combine multiple temperature readings.

To enable that option, click on the first black drop-down in the temperature measurement box and change it to one of the three other options. The second formula will then appear, and you can fill it in.

Immediately after pressing Enter, the new configuration takes effect. Type "show status" and press Enter and you may see some changes already.

Initial testing

You can now use the "override" command to perform some basic checks on your settings. The override command lets you ask the unit to pretend that the supply voltage or temperature sensor readings are a particular value, so you can see what happens without actually having to vary the supply voltage or heat up or cool down the sensors.

This is useful both when the unit is installed in the vehicle (since you can't always get the sensors to read what you want while idling) but also at this early stage, to avoid the need for variable voltage sources and variable resistors.

First, run the "status" command (type "status" and press Enter). Since the unit has no 12V supply, it should give a supply reading close to 0V and it should indicate that it is in sleep mode as a result. Now issue the command "override supply 14.4V" (or similar). Re-run the status command. You should see that the supposed supply voltage has increased and that the unit is now in run mode.

However, since it knows there is no 12V supply, it will not drive the Mosfets, to protect the driving circuitry (which runs off the currently non-existent 12V supply).

Still, you can see what PWM duty cycle the unit will drive each output to for the current temperature sensor inputs. You can then issue a command like "override TS1 47.5C" to make it pretend that temperature sensor #1 is actually at 47.5°C, rather than its actual current temperature. Re-run the status command and observe how the output duty cycle(s) change.

You can then override other sensor temperatures, or change the existing one, to see what happens. If it isn't working as expected, review your configuration and repeat the procedure above to load the new configuration into the unit, then continue testing in this manner. See Fig.6 for an example where the override feature is used.

Once you have finished testing, issue the "override clear" command and the unit will go back to working as usual.

You can then proceed to connect actual loads if you want – they don't have to be fans, a 12V LED would work and would give you an easy way to see how the duty cycle changes.

Having said that, since your fan(s) will already have the right connectors, it may be easiest to use them for testing. Just make sure you have them in a safe location so that when they are powered up, they don't fall over and the

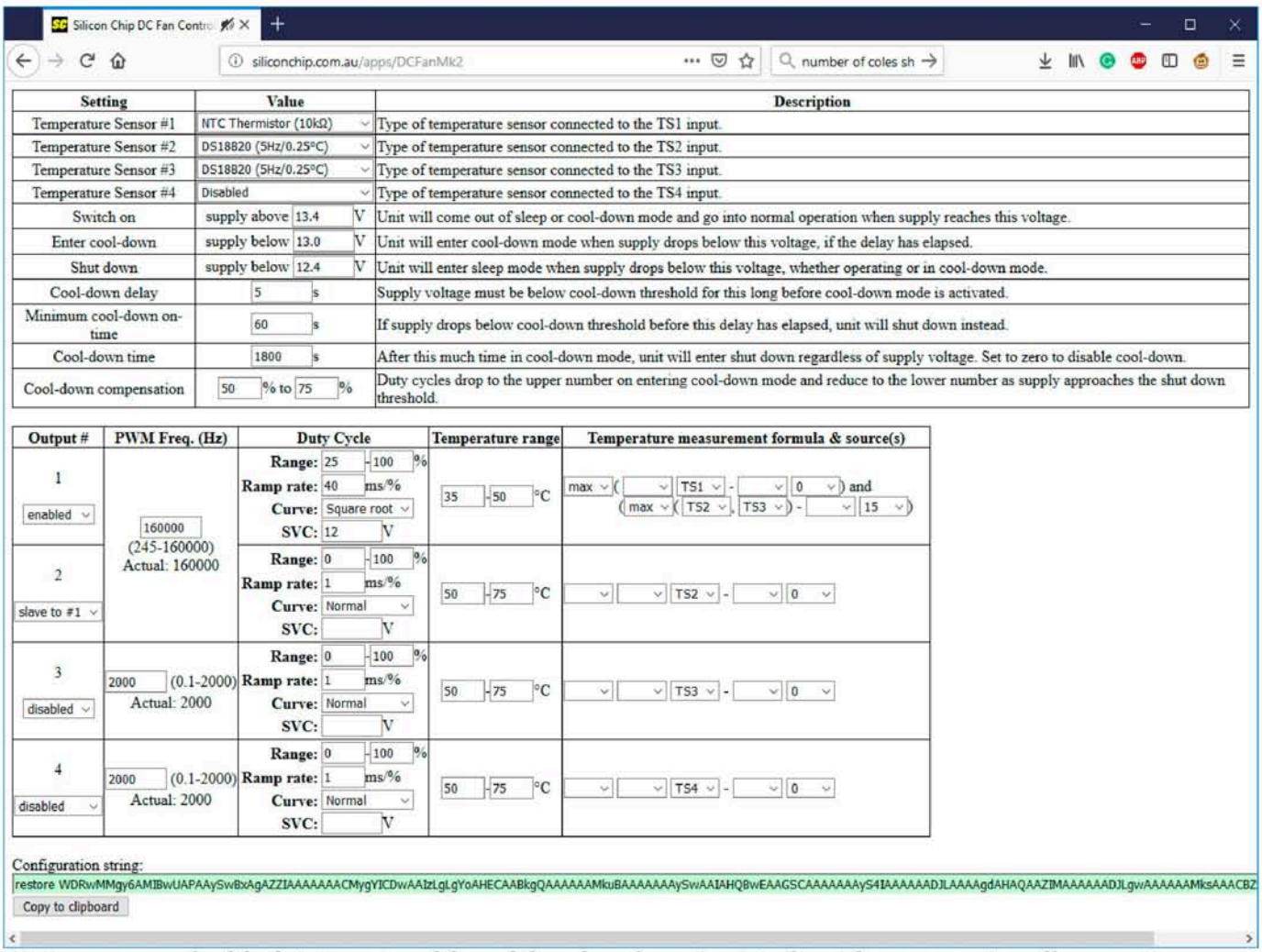

Fig.5: a screen grab of the latest version of the web-based configuration interface. The upper section allows you to configure the temperature sensor types, supply voltage thresholds, timing parameters and cool-down mode settings. The lower section controls the relationship between sensor temperature and duty cycle for the four outputs. In this example, outputs #1 & #2 are combined to control a single 20A fan, based on the temperature of three sensors.

Common automotive connectors

Deutsch connectors

We have used two different types of waterproof connector on our prototype. For the two DS18B20 sensors, we used a single 4-pin Deutsch plug and socket set (Jaycar Cat PP2149). This was cheaper than two 2-pin plugs and sockets (Jaycar Cat PP2150). A 6-pin version is also available (Cat PP2148).

Deutsch connectors are used widely on vehicles and are known to be reliable, with a typical current rating of 13A/pin. They are relatively easy to put together, although there are a few steps, and ideally, you should use a specialised crimping tool (but you can get away without it). Jaycar sells an appropriate tool, Cat TH2000, which also requires a Deutch die set (Cat TH2011).

First, if the wires you will be attaching to the connectors are part of a multi-core cable, you will need to strip back about 20mm of the outer insulation to expose enough wire to feed into the connectors.

You need to strip about 3mm of insulation away from the end of each wire to crimp into the pins later.

Both the plug and socket have a thick gasket inserted into the rear, with a small hole for each wire. The first step is to carefully prise this out of each shell and then push wires through these holes. If your wire is particularly thin (as is the case with the waterproof DS18B20 sensors), use heatshrink tubing to make the wire diameter larger so it will seal properly when pushed through.

The next step is to crimp the wires onto the pins. One set has pointed ends and the other set have cups in the end, which accept the pointed ends of the other pins. The cupped pins are larger so you can figure out which shell they go into by checking for the one with the slightly larger holes.

Once you've figured out which pins will go on which wires, fold the larger metal leaves around the wire insulation, crimping them to hold the wire in place. Next, fold the smaller leaves around the exposed copper. A Deutsch crimping tool will do all this in one step but if you don't have one, you can use small pliers (ideally with angled ends) to carefully fold the leaves around the wire and clamp it down hard. It isn't ideal but it works.

The trick to doing this is to make sure that you don't just squish the leaves flat, as they will tend to spread out and make the pin too wide. You also need to compress them horizontally, so that the final crimp is compact.

We also like to add a little flux and then solder to the top of the exposed wires to ensure good electrical contact, but that technically shouldn't be necessary if the wires have been properly crimped (but that's quite tricky to get right if the wire is very thin).

Once all the pins are soldered, push them into the rear of each housing until you hear them click into place. For the cupped pins, you will know they have been pushed home because their ends will be flush with the front of the connector.

For the pointy pins, it can be quite hard to push them in (especially with the gasket in the way), so you may find it easier to push them in part way and then grab them from inside the front of the shell using pliers, and pull them forward until they lock in place.

Now all you need to do is push both gaskets back into the rear of each shell, making sure that they sit flush with the rear of the connector all around the edge, then push the flat orange plastic piece into the end of the socket (ie, the shell with the cupped pins) until it locks into place. This stops the sealing gasket from being pulled off when you withdraw it from the plug later.

The green plastic wedge pushes into the end of the plug and locks in place in a similar manner.

Narva connectors

This is another type of multi-pin waterproof automotive connector, rated at 20A/pin. They are a bit more expensive than a Deutsch connector but have a higher current rating. Jaycar sells these in 2-pin (Cat PP2110), 3-pin (Cat PP2112), 4-pin (Cat PP2114) and 6-pin (Cat PP2116) versions.

We have used two in our set-up; one 2-pin version for the NTC thermistor on the intercooler radiator, mainly because we already had a suitable plug wired to the existing thermistor in the vehicle, and a 4-pin version to connect the unit to the battery.

Its 20A rating is sufficient for our installation as only one fan is being driven, and the four pins mean we can connect both pairs of battery wires in a single plug/socket.

One of the disadvantages of this type of connector is that the socket pins are a bit sloppy and so plugging the two pieces together can be a bit of a chore. But once the pins find the cups, they all lock into place.

Assembling these is similar to the Deutsch connectors but there are some differences. Rather than one large rubber gasket at the rear, there are individual gaskets for each wire, so you need to remember to push these over the wires before crimping the pins (although they can be pushed over the pins if you've forgotten).

Both the plug and the socket have a section at the rear which unclips and swings out, to allow you to insert the pins, which click into place. You then push the gaskets in, leaving the small central section sticking out, then swing the rear back into place and latch it using the plastic clips. This prevents the gaskets from falling out.

You can tell which is the plug and which is the socket since the socket (which takes the cupped pins) has larger entry holes and is overall deeper.

Note that the gaskets will fit wire rated at around 15-20A. Thinner

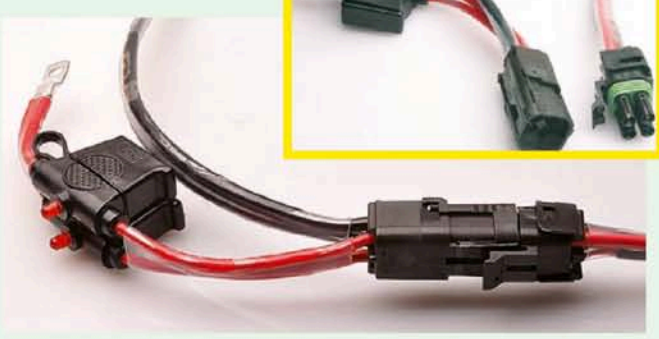

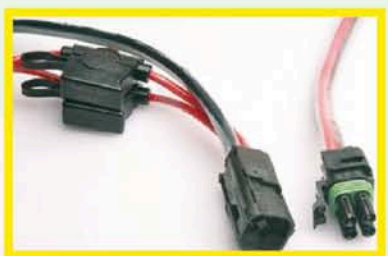

Both the Deutsch (left) and Narva (right) connectors are waterproof and are available with various numbers of pins, from 2 to 47(!).

gauge wire will need to have heatshrink added to form a proper seal while larger gauge wire (~25A) cannot fit through the gaskets (and will only just fit in the connector). You will need to use silicone sealant if you need connectors with heavy duty wiring to be waterproof.

Overall, we suggest that you stick with Deutsch connectors unless your application exceeds their 13A/pin current rating as they are easier to use.

Non-waterproof options

Chances are your fans/pumps will already have a plug and it will be easier if you can find a matching plug rather than cut off the existing one and attach a new one or hard-wire it (although that's certainly feasible).

Our fan already had a "250-series" two-pin connector and these are available from Jaycar too; they sell 2-pin (Cat PP2062), 3-pin (Cat PP2064), 4-pin (Cat PP2066), 6-pin (Cat PP2068) and 8-pin (Cat PP2069) versions.

Make sure you use wire with a high enough current rating to suit your fan. Keep in mind the fan's specified nominal current may be for a 12V supply, and it could draw around 30% more current at 14.4V when the battery is being charged.

Another option for high-current connections, especially to the battery, is Andersen connectors, which are also available from Jaycar. These are available in a range of current ratings including 35A, 50A, 75A, 120A, and175A. These are dual "genderless" connectors (ie, two identical connectors will plug into each other).

Individual Anderson connectors are also available, with lower current ratings.

The 50A connectors are quite large but are probably the best choice for battery connections requiring 30-40A. The lower rated connectors will not accept thick wire and are challenging to assemble, whereas the 50A and up versions feature a "solder cup" which you can fill with liquid solder and then push the wire into, making them relatively straightforward to put together.

We used the 250-series (right) plug because that's what our radiator had fitted. The two-way Narva connector (below) was used because it had a higher current rating (20A). There are several other types available.

spinning blades won't hit anything.

You will also need to connect the sensors (if not already connected) and a 12V power supply with sufficient current capability for further testing. This could be your car battery. You can also use the override command in live testing.

It's also a good idea to check that the sensors are actually working, rather than just relying on the override command.

Test each sensor by heating it up or cooling it down slightly, then re-run the status command and check that the temperature reading from that sensor has changed as expected.

You can use a hot air gun, some ice, a cigarette lighter etc. Just make sure if you are heating the sensor that you don't overheat it or anything nearby.

For example, if using a lighter, keep the flame some distance below the sensor and don't heat it for more than a few seconds.

You may also be able to observe the fans/pumps being driven, depending on whether you're pushing the sensor temperatures into the ranges where those loads are activated.

Preparing the case

Now you need to figure out where each wire is going to enter the case. Try to keep in mind the layout of the pads and connectors on the PCB, ie, avoid wires crossing all over the place inside the box, if possible. Mark and drill the holes required to get those wires into the case. Don't make the holes any larger than necessary.

Solder the fan/pump and power supply wires onto the pads, in the locations shown on Fig.4. It helps to pull these as far into the box as necessary, so you can do the soldering outside the box, then pull the wires back out when you have finished.

The other connections are made with polarised plugs. Depending on the sizes of the holes you've made, you may be able to crimp/solder these onto the wires and then feed them through the holes, then push them into the plastic plug blocks. If they don't fit through the holes, you will have to feed the wires through first and then crimp/solder the pins afterwards.

Note that the LED and any DS18B20 temperature sensor wires are polarity sensitive, so make sure you refer to Fig.4, so you get them on the right side of each plug. The enable/disable and any NTC thermistor wiring is not polarity sensitive so the pins can go into the plugs either way around.

While it isn't necessary to bring the USB connector outside the case – you could just open up the case and plug in a cable if you need to change the way the unit operates – it's certainly more convenient to have it available from the outside.

This is especially true if the unit is going to be buried behind panels or under other bits of the vehicle.

We've provided the option to fit a waterproof USB socket on the outside of the case and connect it via pin header CON3. Simply wire up the USB socket pins as per Fig.4 – the standard USB wire colour codes are shown there too.

But in many cases, it will be easier to feed a micro-B to Type A USB cable through a hole in the box and plug it into CON1 on the board, then seal up the hole with silicone sealant.

Tuck the USB plug away somewhere that it won't get splashed with too much water and tie it up with a twist tie or two so that you can easily remove it and plug it into

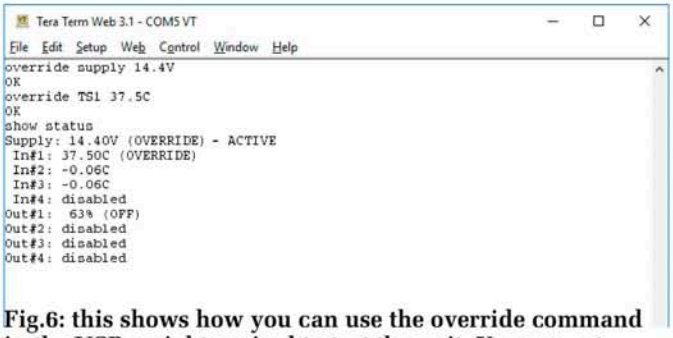

Fig.6: this shows how you can use the override command in the USB serial terminal to test the unit. You can set pretend supply voltages and sensor temperatures and observe how this changes the output duty cycles. If you have fans and a power supply connected, their speeds will change as if the sensor temperatures have changed to the values given.

a laptop later if you need to reconfigure the unit.

That's the approach we took in our installation

Once you have fed all the wires in through the holes you've made in the box, solder and/or plug them into the board where required. If you're paralleling outputs to get the 20A current rating, you can run a short wire link between the negative pads for the master and slave outputs. There's no need to link the positive pads since they all join to the 12V supply anyway.

It's then time for a final test before locating the PCB neatly in the case and securing it with neutral cure silicone sealant. Use the same sealant in generous quantities to seal up all the gaps around the wires where they enter the case, on both sides. Even if it looks like a tight fit, hit it with the goop, just in case!

Make sure none of the wires are too taut either; you want a little slack inside the case to allow for a small amount of movement. Leave it for a few hours to set.

You can then locate it in your vehicle, in the place determined earlier, and tie it down using screws, cable ties or any other method you see fit.

As we said, it's a good idea to place some springy foam or rubber between the case and the vehicle to provide some vibration isolation. We used one of the case's two waterproof screw mounting holes to attach it to a cross member in the vehicle.

After another quick check to make sure everything is working, screw the lid on (including the waterproof gasket) and use cable ties to tidy up the wiring, but again, leave a little slack to allow for movement. After all, most vehicles flex quite a bit when going over big bumps, especially around the heavy engine.

Tie the USB cable (if using a captive one) somewhere convenient, out of the way but where you can easily reach it once any panels are back in place that you have removed, in case you need to adjust the settings later.

Now all that's left is to go for a drive and make sure that everything is working as expected! If you want to leave a laptop plugged in while driving (eg, via a USB extension cable), that's OK, just make sure it's routed in a safe manner (ie, don't leave the bonnet open while driving) and get a passenger to monitor the sensors and fans via the "status" command. SC

List of USB serial terminal commands

status - shows the unit's current status, including sensed battery voltage, sleep/cool-down/active state, sensor temperatures, PWM output duty cycles and override status.

dump - displays the unit's configuration string (including restore command) on the console. This can be pasted into the web app to retrieve the current configuration.

restore - when followed by a base64-encoded string of the appropriate length, updates the unit's configuration in RAM with the new settings (get this from the web app).

save - saves the current configuration in RAM to flash, so it is retained the next time power is cycled. Usually used after a restore command.

revert - loads the configuration from flash into RAM, overwriting any changes which have been made but not saved since power-up.

override supply xx.xxV - pretend that the supply voltage is the specified value until cleared.

override TSn xx.xxC - predent that temperature sensor n is at the specified temperature until cleared.

override clear - clear all current overrides.

The SILICON CHIP READY RECKONER

Gives you instant calculation of

Inductance - Reactance - Capacitance - Frequency

It's ESSENTIAL For ANYONE in ELECTRONICS

You'll find this wall chart as handy as your multimeter – and just as useful!

Whether you're a raw beginner or a PhD rocket scientist . . . if you're building, repairing, checking or designing electronics circuits, **this is what you've been waiting for!** Why try to remember formulas when this chart will give you the answers you seek in seconds . . . easily! Read the feature in the January 2016 issue of SILICON CHIP (*you can view it online*) to see just how much simpler it will make your life!

All you do is follow the lines for the known values . . . and read the unknown value off the intersecting axis. It really is that easy – and fast (much faster than reaching for your calculator!

• Printed on heavy (200gsm) photo paper • Mailed flat (rolled in tube) or folded • Limited quantity available

Mailed Rolled: $20.00 inc P&P & GST **ORDER NOW AT www.siliconchip.com.au/shop** **Mailed Folded: $10.00 inc P&P & GST**

Improve Real-Time Performance and Accuracy

The ATtiny3217 Family is Supported by Functional Safety Software Library

To support designers working on safety-critical real-time systems and sensor nodes, our tinyAVR® Microcontroller (MCU) family has expanded to include two additional devices. To reduce development effort and the time required to achieve Class-B certification, these devices come with a pre-qualified functional safety library. The new family of AVR® MCUs is equipped with several hardware functional safety features, such as Windowed Watchdog Timer, supply supervisory circuits, Cyclic Redundancy Check (CRC) engine, interrupt priority levels, dual Analog-to-Digital Converters (ADCs) and more memory than previous devices in this family.

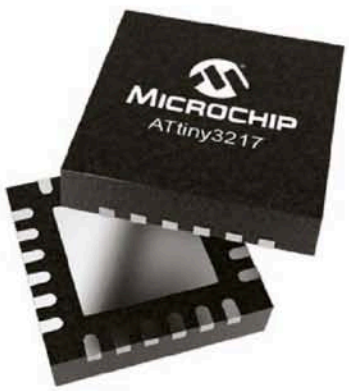

Key Features

- Increase safety by running CRC before code is executed
- Improve reliability of analog measurements with dual ADCs with hardware averaging and threshold interrupt
- Reduce development effort with pre-qualified IEC 60730 Class-B libraries

Contact Information
Microchip Technology Australia
Email: aust_nz.inquiry@microchip.com
Phone: +61 (2) 9868-6733

www.microchip.com/ATtiny3217Family

MICROCHIP

The Microchip name and logo, the Microchip logo, AVR and tinyAVR are registered trademarks of Microchip Technology Incorporated in the U.S.A. and other countries. All other trademarks are the property of their registered owners. © 2018 Microchip Technology Inc. All rights reserved.

VINTAGE RADIO

By Associate Professor Graham Parslow

AWA 1948 compact portable model 450P

The AWA Radiola 450P is quite unusual for a portable and looks more like a small suitcase than a radio. At just 220 x 110 x 100mm, it is roughly comparable in size to an average mantel radio of the time. Most contemporary portables were much larger and built into a fabric-covered timber case.

From the 1920s onwards, there was a market for portable radios that had a role roughly analogous to contemporary mobile phones, as a form of portable entertainment. You can see its intended uses in the illustrations on the cover of the product booklet reproduced above.

The 450P model has become a collectors' item. Although they are reasonably common, they rarely come up for purchase. My good fortune in acquiring this example was due to the break-up of a remarkable radio collection, necessitated by the collector's poor health. Sadly, many other collections will likewise soon be broken up due the ageing demographic of most radio collectors.

The 450P opens up a bit like a 1940s fridge. However, there is a larger AWA mantel radio model 520MY that lays genuine claim to the fridge title. Iconic radios generally have a descriptor and being known as "the fridge" adds resale value.

But either through ignorance or commercial motivation, the 450P and other related models have been described this way too. So the 450P is often referred to as "the AWA Fridge".

The booklet shows a model 450P in cream. The Bakelite case is made of three moulded pieces: the lid, the top and the bottom. AWA made all of these parts in cream, black and brown. They offered the radio with all pieces the same colour or as a two-toned version with the top being a different colour from the rest.

It weighs 1.8kg without batteries, so it is not too heavy to carry, at least not compared with contemporary portables. The lid has a restraint that only allows it to open by 90°, protecting the hinges from damage from overextension. But it looks odd if the radio is carried while switched on; it switches off automatically in the closed position.

Other portables of the time had provision for the lid to slide away, to leave an unobstructed front panel during use.

The unit I restored has a replacement carry strap. The original handle, which is shorter, can be seen on the cover of the product booklet.

Circuit description

The 450P is a minimalistic 4-valve superhet radio with a conventional line-up of battery valves. There is no RF amplification and only one IF amplifier stage. This minimalism, combined with the mass-produced moulded case, kept the price modest. It re-

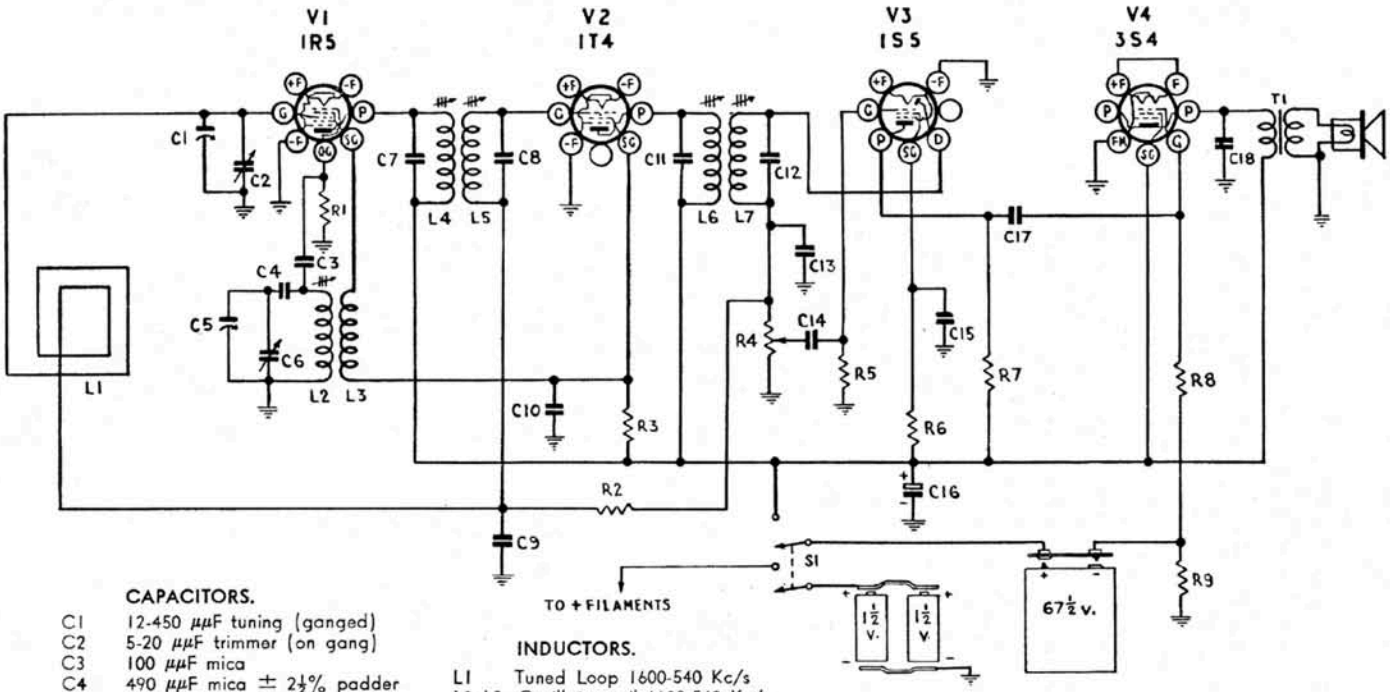

CAPACITORS.

C1	12-450 μμF tuning (ganged)
C2	5-20 μμF trimmer (on gang)
C3	100 μμF mica
C4	490 μμF mica ± 2½% padder
C5	12-450 μμF tuning (ganged)
C6	5-20 μμF trimmer (on gang)
C7	50 μμF mica
C8	50 μμF mica
C9	0.05 μF 200 v. working
C10	0.025 μF 400 v. working
C11	50 μμF mica
C12	50 μμF mica
C13	100 μμF mica
C14	0.0025 μF 600 v. working
C15	0.025 μF 400 v. working
C16	20 μF 200 P.V. electrolytic
C17	0.0025 μF 600 v. working
C18	0.01 μF 600 v. working

INDUCTORS.

L1	Tuned Loop 1600-540 Kc/s
L2, L3	Oscillator coil 1600-540 Kc/s
L4, L5	1st I.F. Transformer
L6, L7	2nd I.F. Transformer

RESISTORS.

R1	0.1 megohm ¼ watt
R2	6.3 megohms ¼ watt
R3	16,000 ohms ¼ watt
R4	1 megohm volume control
R5	10 megohms ¼ watt
R6	4 megohms ¼ watt
R7	1 megohm ¼ watt
R8	2.5 megohms ¼ watt
R9	800 ohms ½ watt

TRANSFORMER.

T1	Loudspeaker transformer

SWITCHES.

S1	Battery switch

LOUDSPEAKER.

3½ inch Permanent Magnet

Owing to an unavoidable shortage of 3S4 valves, a 1S4 has been used in some receivers.

If it is necessary to replace the 1S4 with a 3S4, the following must be done:

Disconnect the lead connecting pin 7 on the output valve socket to pin 7 on the 1S5 socket and remove the insulating sleeve. Then, re-connect the lead from pin 7 to pin 1 on the output valve socket and thence to pin 7 on the 1S5 socket.

A 3S4 valve may now be plugged in and the receiver operated as before.

Circuit diagram for the AWA Radiola 450P portable. It's a conventional 4-valve superhet set with no RF amplification and one IF amplifier stage (1T4 pentode) with an intermediate frequency of 455kHz.
Source: www.kevinchant.com/model-numbers-401---500.html

tailed for £20.15s.9d.

The circuit here is reproduced from Volume VII of the Australian Official Radio Service Manual (AORSM). V1 (1R5 pentagrid-converter) is the mixer/oscillator, V2 (1T4 pentode) is the IF amplifier, V3 (1S5 diode-pentode) provides audio demodulation and preamplification and V4 (3S4 pentode) is the audio output stage, which operates in Class-A mode.

The large loop aerial is mounted inside the set's lid, behind the panel holding the station logging card. Interestingly, the electrical connections to the loop are made via the lid hinges. One wonders how reliable that would have been. Tuning is via a full-size dual-gang tuning capacitor (which only just fits in the case) that ranges from 12pF to 450pF.

The oscillator employs a tuned circuit based around transformer L2/L3 (which has a tuned primary), fixed capacitors C4 & C5 and tuning gang variable capacitor C6. The transformer primary is coupled to the second control grid (labelled "OG") of the 1R5, while the secondary winding is connected to the screen grids ("SG") and DC-biased by the HT supply, decoupled by resistor R3 and capacitor C10.

As the tuned signal from the aerial is fed to the main control grid pin ("G"), this is mixed with the oscillator signal and the result appears at the anode/plate ("P"). The gain of this stage is regulated by AGC fed through the aerial coil and resistor R2 (6.3MΩ). The resulting 455kHz signal passes to the IF amplifier, V2, via the first IF transformer, L4/L5.

After further amplification, the signal then passes through the second IF transformer L6/L7 and is fed to the diode within the 1S5 envelope for demodulation. Capacitor C13 removes the IF signal and the audio is then fed to 1MΩ volume control potentiometer R4. The signal at its wiper is AC-coupled by capacitor C14 to the grid of the 1S5 pentode, for further amplification.

The audio signal at its plate is then AC-coupled via another capacitor, C17, to the grid of the 3S4 pentode output valve, operating in Class-A. Unlike the more common 3V4 valve, it is designed to operate reasonably efficiently from the 67.5V B battery.

Power switch S1 is a spring-leaf type which is actuated by a metal pushrod. This protrudes into the opened case by 5mm, immediately behind the lid-locking catch. The switch's construction achieves two beneficial outcomes.

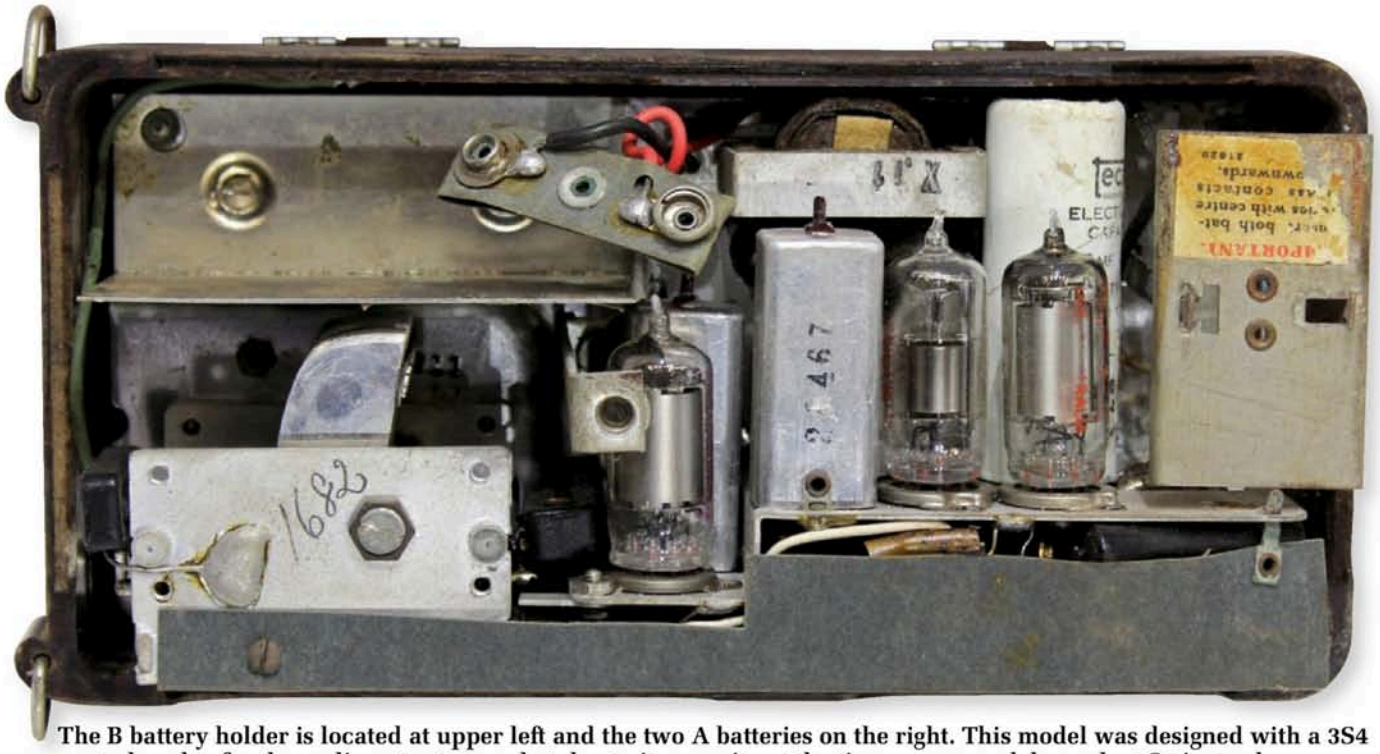

The B battery holder is located at upper left and the two A batteries on the right. This model was designed with a 3S4 pentode valve for the audio output stage, but due to its scarcity at the time, many models used a 1S4 instead.

Firstly, it serves as a double-pole switch to separately switch each battery. This is necessary because the HT battery does not connect directly to ground but instead, to 800Ω resistor R9, which provides grid bias for the 3S4 (around -7V). The switch's second function is to provide a spring release for the lid. When the catch is released, the lid pops up and the radio switches on.

Battery life

Most of the power consumed by this set is in the Class-A output stage based around the 3S4 output valve. That includes 5mA from the HT supply (more than half the 8mA total) and 100mA from the A battery (out of a total of 250mA).

As it's portable, the unit uses relatively small batteries. Fortunately, the low HT current means that the expensive B battery has a reasonable life.

According to the Service Instructions in the manual, the B battery would last four times longer than the A battery. Advertising for the radio claimed that the batteries would last for months of casual use.

Restoration

Despite looking cluttered, most of the components are more accessible than in many larger sets. The only difficult component to access is the 1R5 valve (V1), which is tightly boxed in by the B battery tray.

In their service notes, AWA provided the following procedure for chassis removal:

"Remove the back lid and withdraw

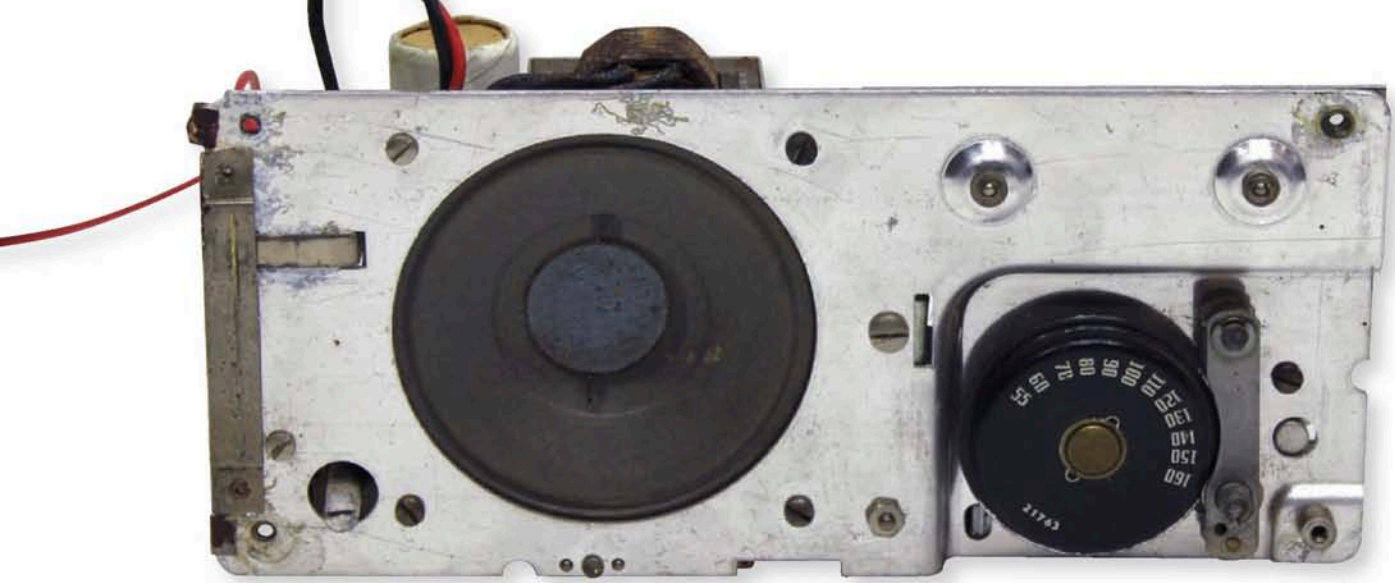

The front of the chassis is adorned by just the 3.5-inch speaker and tuning knob, with a tuning range of 540kHz-1600kHz. The volume control protrudes at lower left of the chassis.

The lid functions as an automatic on/off switch and the loop aerial antenna is taped to a wooden insert which screws onto the inside of the lid. The radio is typically shown standing upright, but here it is horizontal, with the volume knob at left, and the tuning knob on the right.

the batteries from their compartments. Open the front lid and pull the knobs straight off their spindles.

Remove the four mounting screws from the front panel and withdraw the chassis from the cabinet. Care should be taken when removing the chassis that the plunger operating the ON/OFF switch does not fall out and become lost."

I first powered up the radio using bench power supplies and the radio was utterly mute. It intermittently drew between 1-5mA from the HT supply, with the filament current varying between 100-150mA at 1.4V. The AWA manual states that the HT current should be 8mA and by summing the valve data, the total filament current should be 250mA.

Cleaning the oxidised valve pins restored the filament current to 250mA but the HT drain remained at 5mA and the radio was still completely silent.

The modest HT current at least meant that the HT filter electrolytic capacitor C16 was still serviceable (a Tecnico 20µF 200VW in a white cardboard sleeve, mounted above the chassis).

Jiggling the valves (something that I did almost subconsciously) increased the HT current to 10mA but the radio remained silent.

Most capacitors in this radio are MSP types, colloquially described as "melted chocolate". They are notorious for having cracked cases, resulting in no contact between the axial leads and the capacitor foils.

In this radio, all the capacitors looked to be in excellent condition and indeed none needed replacing. A

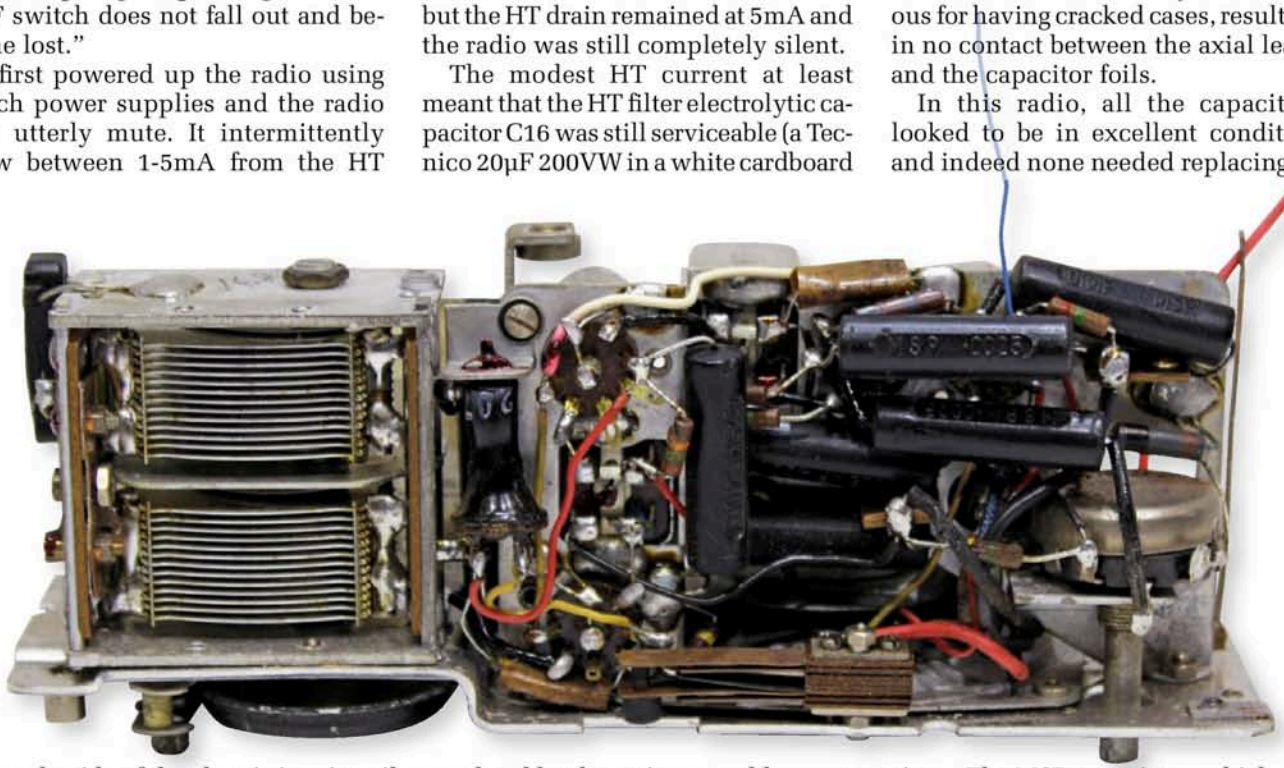

The underside of the chassis is primarily populated by the resistors and larger capacitors. The MSP capacitors, which surprisingly still worked in this set, are coated liquorice-black and marked with "MSP" and their capacitance value. The leaf-spring power switch can be seen at the bottom centre.

handy feature of the MSP capacitors is that the capacitance value is clearly visible, as it is moulded into the case.

Editor's note: MSP stood for Manufacturers Special Products, a division of AWA which made a very large range of radio hardware items; tuning gangs, all sorts of switches, loudspeakers and significantly, those "chocolate" capacitors.

While the majority of MSP devices have stood the tests of time, the capacitors are generally cracked and have very low insulation resistance; that is, if they work at all. That this set had MSP capacitors which were OK is surprising indeed.

So why was the radio silent? The most common reason for this is an open-circuit output transformer primary winding because the fine wire is highly prone to corrosion and going open circuit.

I was dreading this because the small transformer was going to be a challenge to replace. Fortunately, I measured almost the full HT voltage at pin 2 of the 3S4 (the anode), indicating an intact output transformer primary.

I used an old-fashioned analog resistance meter to check the continuity of the secondary of the output transformer, which gave a reading of around 1Ω, as expected. Significantly, there was no crackle from the speaker as I made contact with the meter leads. Close inspection showed that one fly lead to the speaker voice-coil was corroded and open-circuit.

There was battery-leakage corrosion close by on the metalwork, so the speaker was collateral damage.

I hoped that I could fix this without replacing the 3½-inch speaker as it was unlikely I would find an exact replacement and would have to make some changes to accommodate a different speaker.

Fortunately, I was able to temporarily solder a new fly lead to the voice coil and the speaker then crackled encouragingly when tested with the analog resistance meter.

The replacement lead was fed through a hole in the speaker cone and soldered to the small tail of the voice coil wire emanating from the felt centre cap (see the two photographs above).

This restored the audio section. Feeding audio input from a CD player to the 3S4 grid produced surprisingly clear audio, so the speaker was working very well.

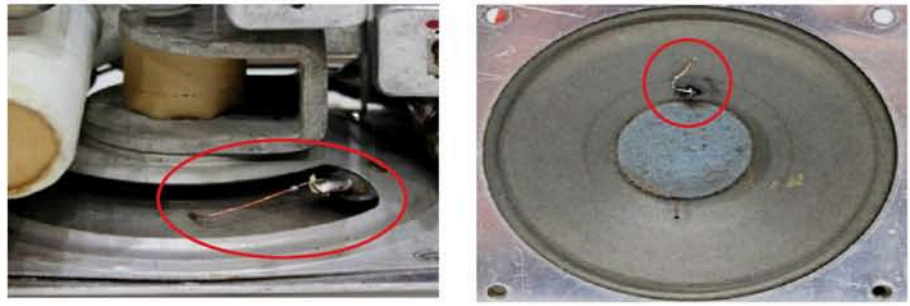

A lead was fed through a hole in the speaker and soldered to the voice coil lead to restore the audio section.

This repair will do until I can find a suitable replacement, a very light multi-strand wire which is able to cope with the vibrations of the speaker cone.

The 3S4 grid bias was -7.0V (textbook perfect) but I still couldn't tune in any stations. I then discovered that a lead from the grid of the 1R5 mixer valve to the loop aerial was shorted to ground because the rubber insulation had failed and bare wire was touching the chassis. A replacement lead restored the set's operation but there was a lot of noise and low sensitivity, making for unsatisfactory listening.

My next thought was that there was a dry solder joint, compromising the signal path. I then prodded various solder joints with a multimeter probe, simultaneously checking voltages and also the mechanical integrity, as I was listening to see whether there was any change in the set's behaviour as I did so.

Contact with a couple of joints produced a miraculous transformation to excellent performance but it was not a dry joint problem. Simply providing an extra antenna at the front end (ie, the multimeter leads) was what made the difference. The antenna effect was better at the plate of the 1R5 than at the grid.

I discussed this puzzling situation with Ian Batty (my fellow Vintage Radio contributor). Ian took the radio and confirmed my observations. Serendipitously, Ian resolved the problem by simply aligning the IF stages (see table below). With hindsight, I should have done this myself.

The aligned radio handily produced the 150mW output that the 3S4 is capable of on local stations. The promotional advertising for the radio claims "beautiful tone and exceptional range".

The sound is fine but the "exceptional range" claim is hard to credit, given the limitations of the bare-bones circuit and small antenna.

In summary, it is an interesting set, not so much for its very basic circuit but for its unusual presentation in that polished Bakelite case.

Few people would recognise it as a portable radio, at the time or now, many decades later. **SC**

Operation	Connect high side of generator to:	Tune generator to:	Tune receiver dial to:	Adjust for maximum peak output:
1	Aerial section of gang (front portion)	455kHz	540kHz	L7 (core)
2				L6 (core)
3				L5 (core)
4				L4 (core)
Repeat above adjustments until the maximum output is obtained				
5	Inductively coupled to loop [A coil of 3-turns of 16-gauge D.C.C wire about 75mm in diameter should be connected between the output terminals of the test instrument and placed co-axial with the loop]	600kHz	600kHz	LF oscillator core adjustment (L2) [rock tuning control back and forth through the signal]
6		1500kHz	1500kHz	HF oscillator adjustment (C6)
7				HF aerial adjustment (C2)
Repeat steps 5-7 until the maximum output is obtained				

Alignment steps for the AWA Radiola 450P, from the service manual.

ASK SILICON CHIP

Got a technical problem? Can't understand a piece of jargon or some technical principle? Drop us a line and we'll answer your question. Send your email to silicon@siliconchip.com.au

Clipping detector with onboard/offboard LEDs

I have recently built a stereo amplifier using your SC200 amplifier modules (January-March 2017; siliconchip.com.au/Series/308) and I am delighted with it. I have fitted the clipping indicator LED (LED6) on each board. Will it overload the current limiting resistor if I also connect offboard LEDs via CON4?

Also, do you have a preamp design which includes tone controls that will match the SC200 for low distortion? (M. G., Guanajuato, Mexico)

- It won't damage anything to connect both onboard and offboard clipping LEDs but there's no guarantee that both will light up.

They could have quite different forward voltages and the one with the lowest forward voltage will take most of the current.

You could fit blue LEDs onboard and red LEDs off-board. In that case, the onboard blue LEDs will work when the offboard LEDs are not connected.

When the offboard LEDs are connected, they will take over and light up with full brightness but the onboard LEDs will not light up. That is because red LEDs have a lower forward voltage than blue LEDs.

We haven't published preamplifiers with tone controls for some time. But we are working on a digitally controlled preamp with tone controls, which we think might be published early next year.

We also plan to design an analog preamp with tone controls soon and it may be published mid next year.

GPS Frequency Reference question

I am planning on building the analog/oscillator sections of your GPS Frequency Reference project but with a different control system. I will therefore be making my own PCBs and firmware. But I am wondering if there would be any advantage in placing the DACs (or at least just IC1) in the oven. Surely its analog back-end would be more stable in a temperature-controlled environment. (R. S., East Malvern, Vic)

- The MCP4922 datasheet suggests that the DNL and INL parameters of the DAC do not change much with temperature, so we don't think it would make much difference.

Since these are resistive string type DACs, we would not expect temperature to have much effect, given that the values of all the resistors in the string will change with temperature by more or less the same amount.

Tide Clock displays slightly inaccurate time

I have built the Raspberry Pi Tide Clock described in the July 2018 issue (siliconchip.com.au/Article/11142) and it works well.

As my first Raspberry Pi project (I have always worked with Microchip PICs before), I had problems with Python2 (Idle).

The text said that I needed Python2 (Idle) but the NOOBS distribution included Python3 (Idle) and I could not find how to load Python 2.

GPS-synched Frequency Reference drawing too much current

I have just built the GPS-synched Frequency Reference (October-November 2018; siliconchip.com.au/Series/326) using the parts supplied by SILICON CHIP, as well as the Micromite Backpack V2 kit.

The BackPack works fine by itself. On powering up the complete assembly, the software kept resetting every couple of seconds.

I monitored the 3.3V line and noticed that it was pulsing from 3.3V down to about 2V. After removing the 2.7kΩ resistor from the base of Q1, the unit powered up normally.

I separated the 3.3V line on the Frequency Reference board and fed the board from a separate 3.3V supply. On my board, the initial current (when cold) was 500mA, which reduced to 270-330mA when the temperature reached 35°C. This is too much current for the MCP1700-3302 (250mA) on the BackPack to supply.

I replaced this with a REG1117-3.3 (800mA). This fixed the problem and the project works fine now.

I was able to solder the REG1117 on to the existing pads for V_{IN} and V_{OUT} and used a short piece of wire to connect the device ground to a ground point at 10µF capacitor which went to the input of the MCP1700.

The 1.1kΩ resistor attached to LK1 on the schematic does not exist on the PCB. I assume it is only required if LK1 is open.

Thanks for a great project. (P. U., Seven Hills, NSW)

- It sounds like the gain value of your transistor Q1 (BC337) is much higher than the ones we used in our prototypes and therefore it is drawing more current from the supply.

You could solve this by increasing the value of the 2.7kΩ resistor, to say 15kΩ (depending on the gain of the transistor). That would reduce the maximum current drawn by Q1.

But your solution of fitting a higher-current regulator is a good idea and it means that you now have a GPS Frequency Reference with a very powerful oven heater, so it will get up to temperature faster.

The 1.1kΩ resistor near LK1 was removed in the final design, as we found it was not necessary; this was noted in the November article.

I managed to load Python2.7.15, which produced a stream of errors when I tried to run the Tide Clock software from the Terminal. Eventually, I realised that Python2.7.13 was loaded on the machine and that ran perfectly from the Terminal.

I have two questions. Firstly, the peak of the sea level graph does not quite correspond with the vertical bar at high/low tide time.

At 17:44, it indicated that high tide would be at 17:46. Then at 17:46, it indicated that the tide was still rising but the text says it is falling. Half an hour later, the indication is that the tide is falling.

I was surprised to find that the sinewave is calculated 50 times each minute. I was expecting 49 calculations, there being 48 half hours in two days. Is the sinewave misplaced, or is the vertical bar misplaced, or am I just being too picky?

Secondly, I live on Bribie Island, Qld. The only BoM site for Bribie Tides is Bongaree on the Passage (west) side but I live at Woorim on the surf (east) side where the tides come 20 minutes after the Bongaree tides. Is it possible to add 20 minutes to the tide time before displaying the sinewaves?

SILICON CHIP is a great magazine, long may it continue. (J. N., Bribie Island, Qld)

● We have heard similar reports from other people saying that they could not see Python2 in their Raspberry Pi menus, but it was installed. It can usually be activated from a command line console by running "idle". "idle3" is the Python3 equivalent.

With regards to the accuracy, we have effectively rounded all times to the nearest 15 minutes in the tide display, hence the discrepancy you are seeing.

It is quite easy to shift the tide times. In the file tideParser.py, there are two identical lines that save the tide times for display (one for high, one for low). They look like this:

```
tide.append(datetime.strptime(
  a['data-time-local'][:19],
  '%Y-%m-%dT%H:%M:%S'))
```

change both of them to:

```
tide.append(datetime.strptime(
  a['data-time-local'][:19],
  '%Y-%m-%dT%H:%M:%S')
  +timedelta(minutes=20))
```

This will make the tides show 20 minutes later than the data would otherwise indicate. It effectively hardwires an offset into the retrieved times.

You may also need to delete the "tideParser.pyc" file and reboot your Pi to reload the files, for this change to take effect. That is a compiled version of the Python file. Deleting it forces use of the new version.

Finding a driver for a large "stepper motor"

Dear SILICON CHIP staff, I have a large 1.5 horsepower variable speed motor on my wood lathe.

After about five years of hobby use, the motor controller "spat its dummy". No one has been able to repair the electronics. I measure 2.3Ω between each pair of wires. The rotor is made from four large rare-earth Neodymium magnets.

Do you have a suitable driver design? The motor will index at 12V. (J. J., Padstow Heights, NSW)

● That is definitely not a stepper motor – it doesn't have enough poles, for a start. Most lathes are powered by induction motors and with a 1.5 horsepower rating, that would have been our first guess, except for your comment about the rare-earth magnets. It seems

SPECIAL OFFER FOR READERS

You've seen the CHRISTMAS TREE THAT GROWS elsewhere in this issue (hint: it starts on page 38!)
Well, here's a really special offer to help you start to grow!

PCB ONLY

If you want to organise your own components but need the blank PCB:

1x PCB:	(16107181)	$5
4x PCBs:	(16107181-4)	$18
18x PCBs:	(16107181-15)	$72
31x PCBs:	(16107181-25)	$120
38x PCBs:	(16107181-38)	$145

More? Call us for a quote!
P&P on any order $10.00 within Australia

PCB and PARTS

Want to build the Christmas Tree in 1, 4, 18, 31 or 38 branches?
Each kit contains the PCB, 74HC595, 47µF capacitor, sockets, 8 1kΩ resistors (+3 220Ω and 3 820Ω), 9 hi-brightness colour LEDs (3 green, red & white)

1x Kit:	(16107181-K)	$10
4x Kits:	(16107181-4K)	$32
18x Kits:	(16107181-15K)	$126
31x Kits:	(16107181-25K)	$199
38x Kits:	(16107181-38K)	$229

More? Call us for a quote!
P&P on any order $10.00 within Australia

that for some reason, the manufacturers have decided to use a three-phase synchronous motor instead.

These are similar to induction motors except that the rotor magnetic field does not need to be induced, as it is provided by the permanent magnets.

The driving scheme is essentially the same but the operating speed is a little bit higher as there is no "slip" like there would be in an induction motor. Low-speed control is likely to be better with a synchronous motor; perhaps that is why they decided to use one.

You could drive it using our Induction Motor Speed Controller (April-May 2012, December 2012 & August 2013; siliconchip.com.au/Series/25). It is available as a kit from Altronics, Cat K6032.

Using pillow speaker with Insomnia Killer

Can I use the Jaycar Pillow Speakers (Cat AS3029) with your Tinnitus/Insomnia Killer design (November 2018; siliconchip.com.au/Article/11308)? (C. B., Strathalbyn, SA)

- Yes, you can use that speaker with this project. But you will need to avoid turning the volume too loud as they have a maximum rating of 0.6W and the Insomnia Killer can deliver more power than that.

Running SC480 from a lower supply voltage

I have a transformer which will give ±30V supply rails when rectified and filtered, and I would like to know whether I can run the SC480 amplifier module (January-February 2003; siliconchip.com.au/Series/109) from this supply. It was originally designed for ±40V supply rails. Do I need to make any changes to the circuit? (anon)

- We haven't tested this so we can't say for sure it would work but in theory, the following changes should allow the SC480 to run from a ±30V supply:
  1. Change 15kΩ resistor at the base of Q1 to 11kΩ.
  2. Change 18kΩ resistor at the collector of Q1 to 8.2kΩ.
  3. Change 6.8kΩ 0.5W resistor at the base of Q6 to 3.9kΩ.

The SC200 (January-March 2017; siliconchip.com.au/Series/308) is superior in pretty much every way, especially in terms of distortion and power delivery, and it isn't any more complex if you leave out the optional clip detector circuitry. We suggest that anybody thinking about building the SC480 should build the SC200 instead.

Glow plug driver not necessary

Would you consider producing a DIY article for a model engine glow plug driver? Many years ago, I built such a device as advertised in the *ETI* Top Projects (Volume 10) book. Later, I modified it as per the Circuit & Design Ideas by Phil Allison.

This seemed like a good idea, whereby it adjusts the current to the glow-plug depending on its resistance, ie, as it changes temperature when the engine starts.

However, I'm finding that its reaction time is too fast and the current drops rapidly as soon as the engine fires, allowing the plug to cool too soon and the engine doesn't always continue to run.

Also, I'm not sure if this rapid

YOU ASKED FOR IT . . . WE'VE DELIVERED!

The Vintage Radio Collection from the pages of SILICON CHIP

"Vintage Radio" is one of the most popular columns which appears every month in Australia's most-read and authoritative electronics magazine, SILICON CHIP.

Over the years many readers have asked us if there was a single source for all "Vintage Radio" articles so a particular set or sets they have managed to get hold of could be referenced. Until now, that was not possible.

But now it is!

We've put together a DVD# containing every "Vintage Radio" column for more than 20 years – from April 1997 right through to December 2018 – and included an easy-to-read index so you can find the one you're looking for. They're all provided in PDF format so the quality is even better than in the magazine (you can actually read many dials!). And there's much more than radios – there's articles on vintage TVs, amplifiers... all from a bygone era!

Physical DVD:
In paper sleeve – $55
In deluxe case (As seen above) **– $60**
(Plus $10 p&p within Australia)
Downloaded copy – $50

#To view, requires Adobe Acrobat on your computer (free to download): https://get.adobe.com/reader/
Cannot be used with an audio DVD Player

Exclusively available from SILICON CHIP: www.siliconchip.com.au/shop

LC Meter calibration to remove parasitic capacitance

I recently build the Wide-Range Digital LC Meter described in the June 2018 issue (siliconchip.com.au/Article/11099).

It appears to function correctly when measuring capacitors and inductors, showing the expected results. The serial monitor display and menu features work OK.

But when there is no device connected to the input terminals, the LCD shows a capacitance reading of 53.74pF. Why am I getting such a large residual capacitance reading with no input leads attached? This is different to what is shown in Fig.4 on page 39 of the June 2018 issue.

I have changed the 100µH inductor and 1nF capacitors but I get very similar results. I also tried a different LM311 with the same result. Do you have any suggestions? (M. R. Karrinyup, WA)

● According to the serial monitor report that you sent us, you have not set the calibrations values for parasitic capacitance and inductance (the C_P and L_P values are still zero).

The note on the photo on page 39 mentions that these values can be adjusted.

A value of 53pF sounds about right pre-calibration (our unit measured around 57pF). The instructions for calibration start on page 39, and the specific instructions for calibrating out stray capacitance are on page 41.

Both of these values default to zero because each unit will be slightly different, so we recommend that constructors follow these calibration procedures to get maximum accuracy from their Meter.

change in current (down and back up again) is good for the glow plug in the long term. A slower reaction time and perhaps a lesser current swing might be better. The commercial units don't appear to have this feature.

I know that a commercial unit can be obtained at a reasonable price, but I like the idea of a DIY or possibly modifying my existing one.

I note that you published an article by Ross Tester in the March 2000 issue of Silicon Chip called "Glow Plug Driver for Powered Models" (siliconchip.com.au/Article/4361).

It is still being sold as a kit by Oatley Electronics. The advantage of this setup is that it can be powered from the same 12V source used for the electric fuel pump and the electric starter that many modellers now use.

Maybe that is the answer. What are your thoughts? (T. C., Newcastle, NSW)

● We ran this past Bob Young, who wrote on radio control and model aircraft for many years in Silicon Chip. He is of the opinion that since the glow plug is in use for such a short time while starting that there is no point in a special driver circuit.

He has never used one. If you want to use a glow plug driver anyway, our March 2000 article with the Oatley kit seems like a good option.

Replacing Mosfet amp with Ultra-LD Mk3

I am considering upgrading my old Mosfet stereo amplifier by replacing the two amplifier modules with the Ultra-LD Mk.3 modules as described in the July and August 2011 issues of Silicon Chip (siliconchip.com.au/Series/286).

My question is regarding the power supply voltage requirements. The Mosfet amp uses a 300VA transformer that produces ±51V DC when lightly loaded.

Would the lower voltage degrade performance at modest levels, say a maximum output of about 50W? My 8Ω speaker system is quite efficient and does not need very high power levels to be enjoyed.

I also read in a later edition of the magazine that it is permissible to run only one pair of output devices in each channel. Unfortunately, I cannot remember which edition of the magazine published the details and it would be appreciated if you could tell me the month/year. (T. D., Epping, NSW)

● We expect your supply voltages will drop a little when loaded. The modules should work fine at that sort of voltage and will be able to deliver more than 50W with very little difference in performance from our published figures.

You can run the amplifier with a single pair of output devices but we don't recommend it at that supply voltage. We specified lower supply rails of around ±42V to ensure that the load current is within the capability of a single pair.

You're probably remembering the article which starts on page 32 of the October 2015 issue. This is for the Ultra-LD Mk.4 but its design is similar to the Mk.3 and the same principles apply.

We simply omit the outer pair of devices and the associated emitter resistors. Three resistors are changed, to suit the lower supply voltages.

One resistor value is different in the Mk.3 version but similar changes can be made; the 6.2kΩ resistors would still be changed to 4.7kΩ while the 22kΩ collector resistor for Q8 would become 16kΩ.

A simple capacitive pickup for tachometer

I need a versatile tachometer for general servicing and tuning up of my car. I think the circuit from the October/November 2006 issues (LED Tachometer with Dual Displays; siliconchip.com.au/Series/82) could easily be modified for my purpose. The only thing it lacks is an inductive pickup to trigger the unit.

I want to be able to feed the trigger input from an inductive pick up from one of the spark plug leads to avoid having to play around with trying get to the engine management wiring, as it will only be used for servicing. My car (a 2004 TL Magna) has a distributor and computer, so there is no wasted spark or divide-by-two problem.

I would also like to be able to use it on single cylinder two-stroke engines in the same manner.

Have you ever described such an inductive pick up that could be used with this project? As I do not need the LED bar graph display, would it still work if I omit the LEDs in the bargraph and just use the 7-segment display instead?

Finally, I would like to point out that there is an error in the circuit diagram

MARKET CENTRE

Cash in your surplus gear. Advertise it here in SILICON CHIP

FOR SALE

LEDs, BRAND NAME and generic LEDs. Heatsinks, fans, LED drivers, power supplies, LED ribbon, kits, components, hardware, EL wire.
www.ledsales.com.au

tronixlabs.com.au – Australia's best value for supported hobbyist electronics from Adafruit, SparkFun, Arduino, Freetronics, Raspberry Pi – along with kits, components and much more – with same-day shipping.

PCB PRODUCTION

PCB MANUFACTURE: single to multilayer. Bare board tested. One-offs to any quantity. 48 hour service. Artwork design. Excellent prices.
Check out our specials:
www.ldelectronics.com.au

NEED A NEW PCB DESIGNED?
Or need to update an old board? We do PCB layouts from circuits, drawings, photocopies or sample boards. Contact Steve at sgobrien8@gmail.com or phone 0401 157 285. Get a new PCB and keep production going!

KIT ASSEMBLY & REPAIR

KEITH RIPPON KIT ASSEMBLY & REPAIR:
* Australia & New Zealand;
* Small production runs.
Phone Keith: 0409 662 794
keith.rippon@gmail.com

DAVE THOMPSON (the Serviceman from SILICON CHIP) is available to help you with kit assembly, project troubleshooting, general electronics and custom design work. No job too small. Based in Christchurch, NZ but service available Australia/NZ wide.
Email dave@davethompson.co.nz

VINTAGE RADIO REPAIRS: electrical mechanical fitter with 36 years experience and extensive knowledge of valve and transistor radios. Professional and reliable repairs. All workmanship guaranteed.
$17 inspection fee plus charges for parts and labour as required. Labour fees $38 p/h. Pensioner discounts available on application.
Contact Alan, VK2FALW on 0425 122 415 or email bigalradioshack@gmail.com

MISCELLANEOUS

ASSORTED BOOKS FOR $5 EACH
Selling assorted books on electronics and other related subjects like audio, video, programming etc. The books are relatively old in most cases and vary in condition.
You'll need to come in person to see what books we have and what we're willing to sell:
SILICON CHIP
1/234 Harbord Road (up the ramp)
Brookvale NSW 2100

Where do you get those HARD-TO-GET PARTS?
Where possible, the SILICON CHIP On-Line Shop stocks hard-to-get project parts, along with PCBs, programmed micros, panels and all the other bits and pieces to enable you to complete your SILICON CHIP project.
SILICON CHIP ON-LINE SHOP
www.siliconchip.com.au/shop

ADVERTISING IN MARKET CENTRE

Classified Ad Rates: $32.00 for up to 20 words (punctuation not charged) plus $1.20 for each additional word. Display ads in Market Centre (minimum 2cm deep, maximum 10cm deep): $82.50 per column centimetre per insertion. All prices include GST. Closing date: 5 weeks prior to month of sale. To book, email the text to silicon@siliconchip.com.au and include your name, address & credit card details, or phone Glyn (02) 9939 3295 or 0431 792 293.

(Fig.3) on page 29 of the October 2006 issue. Q2 and Q3 are labelled on this diagram as BC337 but shown as PNP transistors.

The parts list shows Q2 and Q3 as BC557, which I assume is the correct part. (P. C., Woodcroft, SA)

● You can make a capacitive type pickup by winding several turns of wire around the spark plug lead. One end should be left disconnected and the other end connected to the high-level input of the tachometer.

Alternatively, a larger area pickup could be made from sheet metal that wraps around the spark plug lead. Then connect this to the high-level input on the tachometer.

You may need to experiment with the number of turns or metal area required to trigger the tachometer. The pickup may affect the voltage that is delivered to the spark plug and this method will only work if the spark voltage is positive with respect to vehicle chassis.

You may also need to modify the Tachometer input circuit, The 47nF capacitors at the input may need to be reduced in value, perhaps to less than 100pF.

The 10kΩ and 100kΩ resistors may also need to be higher in value, eg, 470kΩ each. The 2.2µF capacitor will need to be a non-polarised type.

If your spark polarity is negative-going, it will not trigger the tachometer.

There is no need to include LEDs1-33 if these are not required. The circuit will work fine without them.

You are right, Q2 and Q3 should be BC557 types. SC

Coming up in Silicon Chip

3D printing – the latest technology
David Maddison takes an in-depth look at all the latest 3D printing technology, including many amazing commercial applications, including building homes!

AM/FM/DAB+ Radio with Touchscreen Interface
This is a world-first; a DIY world radio which can receive AM, FM and DAB+ broadcasts. It's controlled using a Micromite Explore 100 module with a 5-inch colour touchscreen and has an on-board amplifier for driving stereo speakers, a headphone output, line outputs and provision for external AM and VHF antennas.

Isolated Serial Link
This small and easy-to-build board provides optical isolation for two devices communicating over a 3.3V or 5V level serial link. It's great for connecting a micro module with a mains or battery power supply to a PC, to prevent power glitches and avoiding damage to the PC from a fault in the connected module.

Primer on stepper motors
Stepper motors are used in a variety of electromechanical devices, including hard disk drives, CD/DVD/Blu-ray players, laser cutters and 2D/3D printers. Jim Rowe details how stepper motors work, and how you use them.

The BWD 216A valve+transistor power supply
BWD was a major Australian electronics manufacturer from 1955 to the 1980s. This power supply, released in the mid 1970s, truly showed off their prowess. It could deliver 0-400V with an adjustable current limit of 0-200mA, and had a separate isolated 0-250V output at up to 50mA.

Note: these features are planned or are in preparation and should appear within the next few issues of Silicon Chip.

The January 2019 issue is due on sale in newsagents by Monday, December 31st. Expect postal delivery of subscription copies in Australia between December 28th and January 11th.

Notes & Errata

Tinnitus & Insomnia Killer, November 2018: on page 65, the text refers to Fig.2 as showing the pink noise output but it is actually shown in Fig.3.
LED Tachometer, October & November 2006: in the circuit diagram (Fig.3), on page 29 of the October issue, Q2 and Q3 should be labelled as BC557 types, not BC337.

Advertising Index

Altronics ..... FLYER
Anritsu 33
Blamey Saunders hears 36
Dave Thompson 103
Digi-Key Electronics 3
Emona Instruments ..... IBC
Freetronics 9
Hare & Forbes ..... OBC
Jaycar IFC,49-56
Keith Rippon Kit Assembly 103
LD Electronics 103
LEACH Co Ltd 41
LEDsales 103
Microchip Technology 7,93
Mouser Electronics 23
Ocean Controls 10
PCBcart 37
PCB Designs 103
PicoKit 43
Premier Batteries 73
Rohde & Schwarz 5
SC Vintage Radio DVD 101
Silicon Chip Xmas Tree 100
Silicon Chip Shop 82-83
Silicon Chip Subscriptions 57
Switchmode Power Supplies 31
The Loudspeaker Kit.com 6
Tricom Components 8
Tronixlabs 103
Vintage Radio Repairs 103
Wagner Electronics 11

WARNING!

Silicon Chip magazine regularly describes projects which employ a mains power supply or produce high voltage. All such projects should be considered dangerous or even lethal if not used safely. Readers are warned that high voltage wiring should be carried out according to the instructions in the articles.

When working on these projects use extreme care to ensure that you do not accidentally come into contact with mains AC voltages or high voltage DC. If you are not confident about working with projects employing mains voltages or other high voltages, you are advised not to attempt work on them. Silicon Chip Publications Pty Ltd disclaims any liability for damages should anyone be killed or injured while working on a project or circuit described in any issue of Silicon Chip magazine.

Devices or circuits described in Silicon Chip may be covered by patents. Silicon Chip disclaims any liability for the infringement of such patents by the manufacturing or selling of any such equipment. Silicon Chip also disclaims any liability for projects which are used in such a way as to infringe relevant government regulations and by-laws.

Advertisers are warned that they are responsible for the content of all advertisements and that they must conform to the Competition & Consumer Act 2010 or as subsequently amended and to any governmental regulations which are applicable.

"Rigol Offer Australia's Best Value Test Instruments"

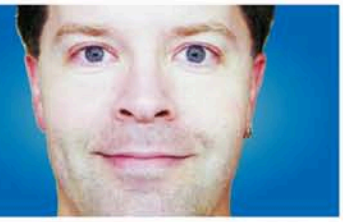

Oscilloscopes

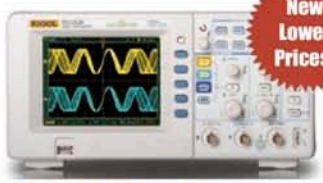

RIGOL DS-1000E Series

- 50MHz & 100MHz, 2 Ch
- 1GS/s Real Time Sampling
- USB Device, USB Host & PictBridge

FROM $379 ex GST

RIGOL DS-1000Z Series

- 50MHz, 70MHz & 100MHz, 4 Ch
- 1GS/s Real Time Sampling
- 24Mpts Standard Memory Depth

FROM $579 ex GST

RIGOL DS-2000E/A Series

- 70MHz, 100MHz & 200MHz, 2 Ch
- 1GS/s & 2GS/s Real Time Sampling
- From 14Mpts Memory Depth

FROM $912 ex GST

Function/Arbitrary Function Generators

RIGOL DG-1022

- 20MHz Maximum Output Frequency
- 2 Output Channels
- USB Device & USB Host

ONLY $539 ex GST

RIGOL DG-1000Z Series

- 25MHz, 30MHz & 60MHz
- 2 Output Channels
- 160 In-Built Waveforms

FROM $517 ex GST

Multimeters

RIGOL DM-3058E

- 5 1/2 Digit
- 9 Functions
- USB & RS232

ONLY $673 ex GST

Power Supplies

RIGOL DP-832

- Triple Output 30V/3A & 5V/3A
- Large 3.5 inch TFT Display
- USB Device, USB Host, LAN & RS232

ONLY $649 ex GST

Spectrum Analysers

RIGOL DSA Series

- 500MHz to 7.5GHz
- RBW settable down to 10 Hz
- Optional Tracking Generator

FROM $999 ex GST

Real-Time Analysers

RIGOL RSA-5000 Series

- 9kHz to 3.2GHz & 6.5GHz
- RBW settable down to 1 Hz
- Optional Tracking Generator

FROM $11,499 ex GST

Buy on-line at www.emona.com.au/rigol

Sydney
Tel 02 9519 3933
Fax 02 9550 1378

Melbourne
Tel 03 9889 0427
Fax 03 9889 0715

Brisbane
Tel 07 3392 7170
Fax 07 3848 9046

Adelaide
Tel 08 8363 5733
Fax 08 83635799

Perth
Tel 08 9361 4200
Fax 08 9361 4300

EMONA

email testinst@emona.com.au

web www.emona.com.au

HARE&FORBES MACHINERYHOUSE

"Setting the standard for Quality & Value"

A family owned Australian business
Established 1930

THE INDUSTRY'S CHOICE!

CNC Machinery | Metal Working | Sheet Metal Fabrication | Wood Working | Workshop & Automotive | Lifting Handling | Cutting Tools | Machine Tool Accessories | Measuring Equipment

CB6-5S
Carbide Burr Double Cut Set

- 5 piece set
- Industrial quality double cut burrs
- SD-3, SE-3, SA-3, SC-3, SF-5
- Ø1/4" x 1-1/2" shank

$82.50 (B900)

Deburring Tool

- Ergonomically designed
- Telescopic shaft
- Blades can be stored from the back side
- Includes 10 x HSS blades

$29.70 (D060)

PTD54
Pipe/Tube Deburring Tool

- Double ended internal/external
- Ø10 - Ø54mm range
- Aluminium knurled body
- Hardened cutting edge
- Suitable for steel, stainless & copper

$82.50 (D068)

EF-5S
Engineers File Set

- 200mm hardened and tempered files
- Second cut: Flat, 1/2 Round, Round, Square, Triangular
- Includes carry case

$42.35 (F100)

RNB40
Nut & Blind Riveter Set

- Blind aluminium rivets (20 of each size): Ø3.2, Ø4.0, Ø4.8, Ø6.4mm
- Aluminium rivet nut inserts (10 of each size): M5, M6, M8, M10
- Mandrel spanner & blow mould case
- 130 piece set

$132 (N001)

Metric Hex Key Set

- 2, 2.5, 3, 4, 5, 6, 8, 10mm
- Chrome vanadium steel
- Adjustable 3 detent positions on T-bar handle
- Free spinning rotating handle

$82.50 (H820)

Imperial Hex Key Set

- 5/64, 3/32, 1/8, 5/32, 3/16, 1/4, 5/16, 3/18"
- Chrome vanadium steel
- Adjustable 3 detent positions on T-bar handle
- Free spinning rotating handle

$82.50 (H821)

Torx Key Set

- T10, T15, T20, T25, T27, T30, T40, T45, T50
- Chrome vanadium steel
- Adjustable 3 detent positions on T-bar handle
- Free spinning rotating handle

$82.50 (H822)

Model 480
Professional Engraver

- Ergonomic design
- 100 strokes per minute
- Adjustable penetration depth
- Includes 4 engraving points

$84.70 (R990)

SFH-M40
Soft Face Hammer

- Ø45mm soft faces
- 1 x Copper insert
- 1 x Steel insert
- 1 x Aluminium insert
- 1 x Polyurethane (Pu) insert
- 1 x Nylonn insert
- 300mm hickory handle

$78.65 (H875)

EP-180
Straight Edge/Seaming Plier

- 180° flat edge
- 57mm wide jaw
- 60mm depth
- 275mm overall length

$55 (S203)

EP-90
90° Edge/Seaming Plier

- Plastic coated hand grips
- 57mm wide jaw
- 55mm depth
- 260mm overall length

$55 (S205)

35-2015
Universal Dial Bevel Protractor

- 0-360°
- Round dial face
- Stainless steel rules & chrome plated body

$132 (Q2015)

70-645
Precision Steel Square

- BSS:939 Grade "B"
- 100mm blade length
- 75 x 11mm base
- Hardened spring steel blade
- True right angle inside and outside

$42.35 (Q645)

SE500
Straight Edge with Bevel

- 500 x 40 x 8mm
- Straight edge & 35° bevelled edge
- Manufactured to DIN 874 / 2
- Made in Germany

$110 (M706)

505-671
Dial Caliper

- 150mm
- 0.02mm graduations
- Made in Japan

$143 (M100)

ALL THIS & MORE IN STORE & ONLINE

- CAM
Staff Member

35-2005
Combination Set

- 300mm / 12"
- Metric & imperial rule
- High accuracy 4 piece set
- Cast iron ground finished

$132 (Q2005)

XH-2P - 2-Axis Digital Readout Package Deal

- Multi function counter suits lathes & mills
- 2 x Scales from 170 ~ 1020mm
- 1 x Bracket kit

SINO

$440 (K5200)

XH-3P - 3-Axis Digital Readout Package Deal

- Multi function counter suits lathes & mills
- 3 x Scales from 170 ~ 1020mm
- 1 x Bracket kit

SINO

$550 (K5202)

UNIQUE PROMO CODE

SC1218

ONLINE OR INSTORE!

VIEW AND PURCHASE THESE ITEMS ONLINE AT
www.machineryhouse.com.au/SC1218

BECOME A MACHINERYHOUSE MATE
www.machineryhouse.com.au/signup

$70 FREE DISCOUNT VOUCHERS

SYDNEY (02) 9890 9111 1/2 Windsor Rd, Northmead

BRISBANE (07) 3715 2200 625 Boundary Rd, Coopers Plains

MELBOURNE (03) 9212 4422 4 Abbotts Rd, Dandenong

PERTH (08) 9373 9999 11 Valentine St, Kewdale

Specifications & Prices are subject to change without notification. All prices include GST and valid until 31-12-18

11_SC_291118